EDITORIAL

THROUGH an oversight, the bridge shown on page 454 of our December issue was called a State Highway bridge whereas it is in reality a county bridge.

FEDERAL farm-loan banks are to be established at Berkeley for district No. 11, comprising California, Nevada, Utah, and Arizona, and at Spokane for district No. 12, comprising Washington, Oregon, Montana, and Idaho.

INDEX for the seventh volume of WESTERN ENGINEERING is now ready for distribution and will be mailed to all those who desire to have their back numbers bound. Drop a line to the circulation manager and the index will be sent by return mail.

THE bond issue for the construction of the Lower Otay dam failed to carry because of a technicality, although they received more than a two-thirds majority of the votes cast on that particular measure. Steps are now being taken to call another election.

GOVERNMENT publications are appearing more promptly than was the rule a few years ago, but there is still room for considerable improvement. We have just received two bulletins of the United States Geological Survey, one dealing with 'Petroleum in 1915,' and the other containing measurements of streams in California during 1913.

A SYSTEMATIC plan for street improvements for the next five years is being prepared for the city of San Jose by the city manager, Mr. Thomas H. Reed. The first step is to be a census of the traffic upon the unpaved streets, so that each street may have the type of improvement corresponding to the amount of travel upon it. Municipal officers in general please copy.

WHATEVER the outcome of the present oil-land litigation and discussion, a speedy settlement would be of advantage in releasing for productive use the funds now in the hands of the receiver. A recent report of Attorney-General Gregory shows that the money in the hands or under the control of the receiver amounts to approximately $4,500,000 besides 1,600,000 barrels of oil.

'TENTATIVE valuations' have been made and announced by the Interstate Commerce Commission for some of the smaller railroads in the East and South. If the public in general understood what the Commission admits freely, namely, that these valuations are only tentative and subject to revision, such announcements would not be objectionable. Unfortunately, however, the average citizen, on reading in his favorite newspaper that the Commission has found a reproduction cost for a certain railroad that is less than half the capitalization, is more firmly convinced than ever that all railroads are grossly over-capitalized. Even should it be found at some later date that the Commission's tentative valuation is far too low, the original impression is likely to remain in the mind of the general public.

THE last span of the Columbia River Interstate bridge between Portland, Oregon, and Vancouver, Washington, was floated into place December 23. It is expected that the bridge will be open for traffic about February 1, although the formal opening will not take place until June at the time of the Portland Rose Festival. Contracts for the construction of the bridge were awarded in February 1915. The total cost including approaches will be about $1,750,000.

EFFICIENCY in the fire department at San Jose, California, is to be assisted by a system of rating the individual firemen. Each man is to start the year with a rating of 500, which will be increased for meritorious conduct and vice versa. If a man's rating reaches 700, he is to be commended and rewarded; if it goes below 400 he is to be reprimanded. The general idea is doubtless good, but the particular plan seems to have the defect of so many plans for increasing efficiency. A man has just twice as good a chance of being reprimanded as of being rewarded.

IN spite of many indications to the contrary, there is good reason to believe that the world is growing better, or at any rate, more sensible. The present Oregon State Highway Commission is composed of three members, all *ex officio,* namely, the Governor of the State, the Secretary of State, and the State Treasurer. Mr. Thomas Kay, the present State Treasurer became convinced that however efficient a business man he might be, it would be better to have some one with a thorough knowledge of highway construction for a highway commissioner. He therefore suggested to Governor Withycombe that the personnel of the commission be changed to include the Governor and two appointive members. Governor Withycombe, however, felt that his election to the highest executive position in the gift of the State did not necessarily indicate that he was technically fitted for the post of highway commissioner and has recommended to the legislature that the Highway Commission be changed to include three appointive members, to be provided with the services of an expert highway engineer. While Mr. Ben W. Olcott, the present Secretary of

Generated on 2024-09-30 01:29 GMT / https://hdl.handle.net/2027/uiug.30112007838433
Public Domain, Google-digitized / http://www.hathitrust.org/access_use#pd-google
Digitized by Google
Original from UNIVERSITY OF ILLINOIS AT URBANA-CHAMPAIGN

State, has not openly expressed an opinion in the matter, it is understood that he is favorable to the change. With all three members of the present Commission desirous of being relieved of their positions, it is hardly likely that the legislature will fail to heed their request.

What Is Gasoline?

A few years ago certain departments of the Federal Government were greatly concerned with the question, "What is Whiskey?" The definition of another commodity of perhaps even more universal use, namely, gasoline, is now being discussed. The Bureau of Standards was the first to undertake the work, turning it over recently to the Bureau of Mines. The latter bureau has prepared a tentative report and submitted it to various refiners, automobile engineers, and other interested persons for their criticisms and suggestions.

If standard specifications for gasoline are to be prepared, this is undoubtedly the way to go about it but the desirability of standard specifications covering the entire country is open to question. To the layman, gasoline is gasoline, although there are at least as many kinds of crude petroleum as there are fields, and probably an even greater number of kinds of gasoline, since the methods of individual refiners differ widely. The 60-gravity gasoline of one field may be just as volatile as the 65-gravity product of another region. It is not so long ago that the Western motorist considered 60° as the lowest practicable limit for automobile service. Now he thankfully accepts a 54° product and frequently mixes engine distillate with that. It is now recognized that the 'end-point' is of more importance than the gravity in determining the suitability of a given gasoline for most purposes. Again a low-gravity gasoline usually produces more power than one of high gravity.

It is a good plan for the prospective purchaser to know all these facts, but they can hardly be embodied in a hard and fast set of specifications. The various refiners are each producing a product whose properties are practically constant, and which, at least when it leaves the refinery, is not adulterated. The large consumer will continue to purchase the product that is most suitable for his particular needs, possibly even making his own 'blend.' The small consumer had better stick to some standard brand.

Furthermore, the establishment of standards for gasoline would require an elaborate and expensive system of inspection, the cost of which would ultimately be paid by the consumer. It would be far better to spend a small part of this money on comparative tests of different gasolines and distillates with different kinds of engines. This would be particularly useful at the present time, when there is a heavy demand for gasoline while the low-gravity distillates are a drug on the market. Authoritative tests showing the extent to which these distillates could be used in the place of gasoline would assist in real conservation.

Scapegoats and Naval Reserves

Students of Biblical history will recall that when the Israelites had committed a large and variegated assortment of sins and desired a new deal, it was their custom to call the people together, have a priest place their sins upon a goat, which was thereupon supposed to carry them with him into the desert, and everybody else went home satisfied. A similar ceremony is likely to be staged in the desert of the San Joaquin Valley oilfields, only in this case the goat, as so frequently happens in these days, is a corporation, or rather, two corporations, namely, the Standard Oil Company and the Associated Oil Company.

One of the principal obstacles to legislation for the relief of oil operators affected by the withdrawal orders has been the opposition of the Navy Department to the granting of any patents to lands within the so-called naval reserves. While the three naval reserves, two of which are in California, and one in Wyoming, comprise but a small part of the entire withdrawn area, the attitude of the Navy Department, has indirectly affected the opinions of Congressmen and others regarding the advisability of legislation for the benefit of any of the operators affected by the withdrawal orders. Naval Reserve No. 3 in Wyoming is almost entirely composed of Government land. Of the California reserves, the only important private holdings in No. 1 are one section of patented land owned by the Standard Oil Company, and four sections of located land claimed by the Associated Oil Company.

The title of the Associated Oil Company is, of course rather doubtful, although their land contains the only wells in the Elk Hills district that have shown indications of a commercial production of oil. These wells, however, were shut-down six years ago, soon after they were completed. Naval Reserve No. 2, on the other hand, includes a large amount of patented land on which there are producing wells. Should the Government succeed in winning all its suits against companies operating within that reserve, it would still be unable to prevent the companies on patented land from operating their 'line-wells.' The Navy Department would therefore be obliged in self-defense to develop the land as quickly as possible, irrespective of conservation principles and the same would be true in Reserve No. 1.

As a compromise, it has been proposed that the Standard Oil Company and the Associated Oil Company relinquish all claims to land in Reserve No. 1 if the Navy Department will withdraw its objections to the granting of patents to bona fide operators in Reserve No. 2. It is believed that if this is done, it will not be difficult to enact a relief measure that will safeguard the rights of all operators who entered upon unpatented land in good faith. A great deal of credit is due the two corporations that have signified their willingness to accept the proposed arrangement, particularly because, if the efforts of those concerned are successful, the small operator will be the principle one to be benefited.

Generated on 2024-09-30 01:25 GMT / https://hdl.handle.net/2027/uiug.30112007838433
Public Domain, Google-digitized / http://www.hathitrust.org/access_use#pd-google
Digitized by Google
Original from UNIVERSITY OF ILLINOIS AT URBANA-CHAMPAIGN

REVIEW OF THE MONTH

WHEN the funds from the original $18,000,000 bond issue have been exhausted, the California State Highway Commission will have constructed 1562 miles of highway, of which 942 miles has a cement concrete base and a thin bituminous wearing surface, 18 miles has a cement concrete base and a topeka wearing surface, 5 miles has a cement concrete base and an asphalt surface, 17 miles has a macadam base and a topeka surface, 159 miles is of oiled macadam, 10 miles is of asphaltic concrete, while 411 miles has been simply graded. Work has been carried on in 45 of the 58 counties of the State.

THE hazardous character of municipal contracting was shown recently at Spokane, where a contracting firm commenced digging the trench for a sewer after the contract had been awarded to them, but before the final confirmation of the sewer assessment roll. When the excavation was started it was found that a water-main already occupied the position that had been allotted to the sewer. The prospective purchasers of the sewer bonds refused to consent to a change in the position of the sewer. The city attorney has recommended that the contract be canceled and proceedings be commenced again. The incident also illustrates the importance of a complete and accurate map of all municipal improvements, particularly underground pipes and conduits.

MUNICIPAL and county bonds are commanding higher prices than for many years past. Recently, both Sacramento and Stanislaus counties, California, have marketed good-sized bond issues for highway improvements at about 106. As the bonds in both cases bear 4½% interest, the net return to the purchaser is but little more than 4%. In Washington, the city of Walla Walla has succeeded in disposing of a $338,000 refunding issue at par. The bonds bear 4% interest and mature at the rate of one-twentieth of the issue each year. They replace securities that bore 5% interest. Where the terms of the original issue will permit, municipalities will do well to consider the question of refunding their securities at a lower rate of interest.

COMPLETE returns regarding the vote on the $15,000,000 highway bond issue in California have been made public. The total vote for the bonds was 542,239, while the vote against was 137,107, or practically a 4 to 1 majority. Every county in the State gave at least a 2 to 1 majority, while Del Norte county voted 20 to 1 in favor of the bonds. It is interesting to trace the growth of the sentiment for highway improvement during the past six years by comparing the recent vote with that recorded in 1910 on the original $18,000,000 issue. At that time the bonds received but little more than a bare majority, while a number of counties voted against the measure. With the exception of El Dorado, every county in the State increased its proportional majority for the bonds over that given six years ago, and even in that case the vote was nearly 4 to 1 in favor of the bonds.

THE La Brea asphalt pits have been formally transferred to the city of Los Angeles by Mr. G. A. Hancock, former owner of the tract. These pits contain more Pleistocene fossil mammals than have been found anywhere else in the world. The tract, containing 32 acres, is to be used as a park. The plans so far announced include the restoration of the pits themselves to as near their original state as possible, and the construction of a museum building to contain a number of the fossil animals recovered from the pits. These plans should be enlarged to include a general museum of the California petroleum industry.

THE loss of revenue to the different steam and electric railroad companies in California because of jitney competition is estimated at $5,000,000 per year. At the present State tax-rate on transportation companies, this indicates a loss of over $250,000 per year to the State in taxes. The State has practically nothing to show for this amount, since the automobile license taxes that are paid into the State Highway maintenance fund by the jitney operators probably do not compensate for the wear upon the highways that they cause. It is probable that the next legislature will take steps toward taxing commercial automobiles in such a way as to compensate for this lost $250,000. Meanwhile the State Supreme Court has ruled that the State Railroad Commission has jurisdiction over automobile lines. Before this ruling was made, the Commission refused to regulate the automobile bus, because it was doubtful regarding jurisdiction.

SHALE-OIL lands in Colorado and Utah with an area of 131,000 acres are to be withdrawn from entry by President Wilson on the recommendation of Secretary Lane. The United States Geological Survey has estimated that the lands will yield 1,000,000,000 barrels of petroleum besides large quantities of ammonium sulphate. The land is close to railroad lines. Judging from the results obtained in the Scotch shale-oil industry, and taking into consideration the increasing demand for ammonium sulphate as a fertilizer, it seems probable that crude oil could be produced on this land for from $1.50 to $2 per barrel, or not much lower than the average price of crude oil at the present time, taking the country

Generated on 2024-09-30 01:23 GMT / https://hdl.handle.net/2027/uiug.30112007838433
Public Domain, Google-digitized / http://www.hathitrust.org/access_use#pd-google
Digitized by Google
Original from UNIVERSITY OF ILLINOIS AT URBANA-CHAMPAIGN

as a whole. In view of the fact that the maximum yearly consumption of the Navy has been about 7,000,000 barrels, it would seem that the Navy is likely to have sufficient oil for many years to come, even without depriving the California operator of the reward of his efforts.

PURCHASE of the distribution systems of the Southern California Edison Company and the Pacific Light & Power Corporation is to be considered by the voters of Los Angeles next month. An election has been called to vote on a bond issue of $12,000,000, $9,415,000 of which is to be used for the purchase of the distribution systems of the two companies. The remaining $2,585,000 is presumably to be spent for developing power from the Aqueduct water. A total of $10,000,000 has already been appropriated for this purpose, making $22,000,000 in all for development, transmission, and distribution of Aqueduct power, or nearly as much as the cost of the Aqueduct itself.

IT will be remembered that several months ago, the city, after the failure of some earlier negotiations for the purchase of the distribution systems of the power companies, decided to construct its own system, and has even done some work on this duplication of equipment. It is likely that this prospect of disastrous competition has had considerable influence upon the decision of the two companies to sell. A third concern, the Los Angeles Gas & Electric Corporation, withdrew from the negotiations a short time ago. It is reasonable to suppose that both the city and the corporation will make every effort to get business, regardless of duplication of equipment and other economic losses. Even at this late date, why could not the city arrange to sell its power to the private corporations and leave its distribution to these same concerns, which are now giving good service in the territory affected? If the city goes into the general power business it is hardly likely that the consumer will get either better or cheaper service than that which he now receives, while the tax-payer is in danger of higher rates.

CONSTRUCTION of the Pine Flat reservoir on Kings river has been brought a step nearer by the favorable report upon the project by Mr. Louis W. Hill, consulting engineer for the United States Reclamation Service. With the reservoir completed, Mr. Hill estimates that 1,700,000 acre-feet may be obtained yearly from the river except in seasons of unusually small flow. In addition, in ordinary years, 300,000 acre-feet is to be obtained from wells in the Kings River delta, making 2,000,000 acre-feet in all, any deficiency in the river-flow being made up by the additional pumping of the wells. The wells are to be operated by electric power generated at the dam-site. It is shown that this amount of pumping will not result in too great a draught upon the ground-water supplies. With this 2,000,000 acre-feet it will be possible to irrigate 1,000,000 acres, as against 600,000 acres now being irrigated from the river alone without regulation, besides providing a more reliable supply for the land that is now being irrigated. The proposed dam would contain 1,000,000 cubic yards of concrete. If portland cement is used the estimated cost of construction for the dam alone is $6,965,000. If sand-cement, a mixture of portland cement and other finely-ground material, such as was used for the Arrowrock and Elephant Butte dam, is used, the estimated cost is $6,198,000. The cost of a power-plant at the dam-site, transmission lines, and wells and individual pumping-plants makes the total amount for the project $9,530,000 if portland cement is used, and $8,763,000 if sand-cement is used. These figures include interest during construction. It is proposed to form an irrigation district covering all the land affected, which lies in Fresno, Kings, and Tulare counties.

THE Orange County, California, Highway Commission has completed the construction of the county highway system and has rendered its final report. The bond issue was for $1,270,000, and it was sold for $1,298,829. Payments from the county from the general tax-levy for maintenance, etc., donations, refunds, and sale of equipment brought the total amount received by the Commission to $1,413,682. Construction was commenced in July 1913. The original plans called for 107.37 miles of highways. This mileage was completed in March 1915, but the funds were found to be sufficient to construct 23.72 miles more, making a total of 131.09 miles. A few miles of the system was simply graded, but nearly all the roads were also paved with a four-inch concrete base and an oil and screening surface. The pavement was from 16 to 20 feet wide, most of it being 18 feet. With all accounts distributed, including overhead, the cost per mile of the highways, exclusive of bridges, was $9650. It should be remembered in this connection that grading in most cases was light, and that most of the highways followed established roads, making the surveying costs low. This low cost of surveying is also shown in the separate statement of overhead expense which includes the following items:

Preliminary expense	$ 4,751.59
Salaries of Commission	3,922.03
Salaries of officers	15,092.50
Surveying instruments (less salvage)	443.92
Office supplies (less salvage)	2,688.52
General expense	5,642.27
Printing bonds	2,500.00
State compensation insurance	237.09
Equipment (less salvage)	1,420.05
Surveying supplies	2,727.13
Blue printing	442.01
General work	14,588.39
Testing cement and oils	3,686.01
Total	$58,141.51

This gives the remarkably low overhead charge of 4.3%. The cost of right-of-way was also low, the total being $3785.29. The county was particularly fortunate in finding men of ability who were willing to devote a large part of their time to the duties of the office of highway commissioner while receiving a nominal salary.

Generated on 2024-09-30 01:27 GMT / https://hdl.handle.net/2027/uiug.30112007838433
Public Domain, Google-digitized / http://www.hathitrust.org/access_use#pd-google
Digitized by Google
Original from UNIVERSITY OF ILLINOIS AT URBANA-CHAMPAIGN

DISCUSSION

The Officers' Reserve Corps

The following statement issued by the Joint Military Affairs Committee of the San Francisco Branches of the national engineering and chemical societies should be of interest to all engineers on the Pacific Coast. It is particularly important that engineers residing in and near the San Francisco Bay cities avail themselves of the opportunity of studying under the direction of Regular Army officers.

Statement:

This circular, sent out by the Joint Military Affairs Committee of the San Francisco Branches of the four national engineering societies and the American Chemical Society, is issued to give a brief explanation of the provision of the Army Bill which provides for an Officers' Reserve Corps of the Army, and to announce a projected lecture and study course to be held under the guidance and with the assistance of several officers of the regular army for the purpose of providing a means whereby civilian engineers may prepare themselves to take the examination for entrance into the Officers' Reserve Corps.

The Officers' Reserve Corps:

Largely in response to a movement initiated by a committee representing the National Engineering Societies, of which Mr. Wm. Barclay Parsons is Chairman, the Army Bill, which became effective July 1st, contained provisions creating the Officers' Reserve Corps. Its purpose is to secure a reserve of men whose services will be available as officers in time of war, and to provide for study and training in qualification therefor. A full explanation of the provisions of the Act is given in General Orders No. 32, 1916, War Department, a copy of which can be obtained by addressing the Department at Washington.

The Officers' Reserve Corps is divided into twelve sections, designated as follows:

(1) Infantry Officers' Reserve Corps.
(2) Cavalry Officers' Reserve Corps.
(3) Field Artillery Officers' Reserve Corps.
(4) Coast Artillery Officers' Reserve Corps.
(5) Medical (to include the reserve officers of the Medical Corps, Dental Corps, and Veterinary Corps) Officers' Reserve Corps.
(6) Adjutant Generals' Officers' Reserve Corps.
(7) Judge Advocate Generals' Officers' Reserve Corps.
(8) Inspector Generals' Officers' Reserve Corps.
(9) Quartermasters' Officers' Reserve Corps.
(10) Engineers' Officers' Reserve Corps.
(11) Ordnance Officers' Reserve Corps.
(12) Signal Officers' Reserve Corps.

Probably the section of The Reserve Corps of most general interest will be The Quartermaster Corps, to qualify for which an applicant will be examined for duties that require either a knowledge of administrative and clerical details, or for special services of a business or professional nature requiring no special military knowledge. The first class will receive a mental examination to test their fitness for the peculiar services required; the second class will not be subject to mental examination, and neither class is subject to age limits, but both are subject to physical examination.

It is believed that engineers will be interested in five of these sections, namely: (4) Coast Artillery; (9) Quartermaster; (10) Engineer; (11) Ordnance and (12) Signal Officers' Reserve Corps, and information in this circular is limited thereto. As a guide to the preparation required, examinations in the Coast Artillery Corps, (for example), will be on Army Regulations and important General Orders, Drill Regulations, Field Service Regulations, Explosives, Electricity (an oral examination to include theoretical electricity as the basis of electrical measurements; Ohm's law, electro magnetism and induced currents; methods of measurement of voltage, current, energy and resistance, and of apparatus therefor; primary cells and the general principles of storage batteries, generators and motors). For the higher grades this examination will include, in addition to the foregoing, elementary and applied mechanics, care and operation of steam boilers, steam engines, and internal combustion engines; the theory, care and operation of dynamos, storage batteries, telephones and searchlights; from which it would appear that both the mechanical and electrical engineers should be largely interested in the Coast Artillery Work.

Commissions will be issued for the ranks of major, captain, first lieutenant and second lieutenant. The ratio between the numbers in each of the first three grades will be the same as that which exists between the same grades in the regular army, but in the grade of second lieutenant the number will be unlimited. As provided by law, the commissions will be for five years, renewable, however, with the approval of the Secretary of War and after a physical examination.

The responsibilities assumed by holders of commissions are:

1. They are subject in time of peace to duty in instruction camps or elsewhere for two weeks each year, or longer with the officers' consent, in connection with which a cheap khaki uniform will be required. It is expected that a reasonable latitude in the choice of time for this service will be allowed.
2. They are subject to order to duty by the President whenever war is actual or imminent, in a rank not below that held in the Reserve Corps of Engineers.

The benefits conferred are:

1. Opportunity for the engineer to render his most effective service to the country in time of war, with assurance that he will be given responsibility and rank commensurate with his talents and abilities, and will have the opportunity to prepare himself for that work beforehand by study and instruction.
2. Rank in the army of the United States and corresponding pay while on duty.
3. Preferred opportunity to obtain a commission in the regular army whenever there are vacancies not filled by graduates from the Military Academy or by promotion from the enlisted ranks.
4. Right to use military title and wear uniform on occasions of ceremony after expiration of commission.

Enlistment in the Officers' Reserve Corps is open to all citizens of the United States for grades up to and including that of major, who, upon examination prescribed by the President, shall be found physically, mentally and morally qualified to hold such commissions, excepting officers of the regular army on the active list or of the National Guard. In the (5) Medical; (7) Judge Advocate Generals; (9) Quartermasters; (10) Engineers; (11) Ordnance and (12) Signal Corps there is no age limit, but in the other corps no one may be appointed a second lieutenant after he has reached the age of thirty-two years, a first lieutenant after thirty-six years, a captain after forty years and a major after forty-five years.

Candidates for appointment in the Engineers' Officers' Reserve Corps will be examined either: (a) for duty with combatant engineer troops or other duties in the service at the front, or (b) for special service in the line of communications or other points in rear, including engineering work in connection with seacoast defenses. The duties of the Corps of Engineers comprise reconnoitering and surveying for military purposes, including the laying out of camps; selection of sites and formation of plans and estimates for military defenses; construction and repair of fortifications and their accessories; * * * The installation of electric power plants and electric power cable connected with seacoast batteries; * * * construction and repair of military roads, railroads, and bridges; military demolitions; * * * In time of war within the theater of operations it has charge of the location, design, and construction of wharves, piers, landings, storehouses, hospitals, and other structures of general interest, and of the construction, maintenance, and repair of roads, ferries, bridges, and incidental structures, and of the construction, maintenance, and operation of railroads under military control, including the construction and operation of armored trains. Reserve officers from the following civilian occupations will be required for the special services of the Corps of Engineers:

Bridge engineers.
Constructing engineers (earth and concrete).
Constructing engineers (wharves, piers, and buildings).

Generated on 2024-09-30 01:29 GMT / https://hdl.handle.net/2027/uiug.30112007838433
Public Domain, Google-digitized / http://www.hathitrust.org/access_use#pd-google
Digitized by Google
Original from UNIVERSITY OF ILLINOIS AT URBANA-CHAMPAIGN

Electrical engineers (for small plants and power lines).
Highway engineers.
Mining engineers (skilled in tunneling and use of explosives).
Railroad engineers (construction and maintenance).
Railroad operating officials.
Sanitary engineers.
Topographical engineers.

Engineers of telephone and telegraph companies will be directly interested in the Signal Corps.

Railroad officials and engineers are particularly interested in the distinction between the Engineer Corps and the Quartermaster Corps as applied to railroading. In time of war (actual or threatened), the Federal Government undoubtedly will take charge at once of all railroads in or near the threatened territory, which will be divided into two sections—namely, the theater of operations and the lines of communication, which, in general, is the connecting link between the field of action and the base and through which must pass, in both directions, all of the men, materials and supplies required for use in prosecuting the campaign. A railroad involved in the theater of operations is managed and operated by the Engineer Corps; a railroad outside of the theater of operations, but involved in the line of communications, is operated by the Quartermaster Corps.

A complete explanation of the provisions relating to the (10) Engineers' Corps is found in the second circular of the National Engineering Societies sent out September 12, 1916, which also contains sample questions for the examinations.

Other provisions of the Act, relating to the Reserve Officers' Training Camp, are not dwelt upon here.

Examinations:

Examining boards are provided for in the large cities of the country, including Seattle, Portland, San Francisco and Los Angeles. All applicants must first pass a medical examination. An elementary examination is given in English, arithmetic, geography and history of the United States. This examination can be waived by the board if the applicant produces a diploma or certificate from an educational institution; or for other reasons. In the case of officers for the Engineers' Corps, division (b) special service, no oral or professional examination will be required, but recommendations of boards will be required in lieu of such examinations. Candidates will submit evidence of their actual employment in corresponding or higher positions in civil life and references to persons under whom they have been or are employed.

The same statement is true of applicants for commissions in the aviation section of the Signal Corps, but information may be obtained by the board by practical tests. Applications for the rank of major, captain, and second lieutenant in the Quartermasters' Corps, whose duties are not administrative, are not subject to mental examination, but knowledge of and experience in trades and lines of business are required, including railroad and other transportation lines, supply houses, manufactories, engineering in its various branches, etc.

All other applicants are examined on administration, drill regulations, field service regulations, topography and special subjects relating to the different sections of the Officers' Reserve Corps. A full outline of these subjects is given in "General Orders No. 32," 1916. The extent of the examinations depends upon the rank applied for by the applicant.

It is to be noted that while previous military training is not required, it is desirable.

STUDY AND LECTURE COURSE

The Committee proposes to establish a study and lecture course relating to the following sections: (4) Coast Artillery, (9) Quartermasters, (10) Engineers, (11) Ordnance and (12) Signal Corps. The following officers of the regular army have kindly volunteered their services in the way of advice, general supervision of the study course and lectures:

Colonel Charles R. Krauthoff, Quartermaster Corps.
Captain John B. Murphy, Coast Artillery Corps.
Captain Hollis Le R. Muller, Signal Corps, Aviation Section.
Captain Richard Park, Engineer Corps.
Captain William P. Platt, Coast Artillery Corps (Ordnance).

The course of study has not yet been fully outlined. The preliminary part of the course will be general, relating to the organization of the army, the duties of the various arms and branches of the service and related general subjects. This will be followed by a detailed study of the subjects connected with the various sections referred to above. The extent of the course of study and lectures will depend upon the number of applicants to take the course and the requirement to pass the examinations in the different sections.

Anyone desiring to take the course will please communicate with the Military Affairs Committee, Engineers Club, Mechanics Institute Building, San Francisco.

The course is open to anyone and is not limited to engineers or those who belong to the national societies.

Anyone taking the course is not thereby obligated to join the Officers' Reserve Corps, nor is any guarantee given that the student will pass the examinations. It is the opinion of the officers of the army that the subjects are simple and that no extensive course is necessary to prepare an applicant for examination.

Engineers now have offered to them their opportunity to give their services to their Country most effectively, when she will have most need of them, with the assurance that they will be given responsibility and rank commensurate with their experience and ability. The Officers' Reserve Corps offers a tangible means by which civilians may affiliate themselves with the army without direct enlistment. It provides a small measure of training and gives the member a place where his civilian training will be properly available in time of war, when he would desire to offer his services to the nation. Some digging is involved for those who have not had military training or who have forgotten much of their early experiences. The Army Officers who have in hand the instruction of reserve officers do not expect us to be experienced—they expect to give us experience. All they ask of us is to be willing to learn and to give up some of our spare time to this end. In return we are assured of preferred opportunity to obtain a commission in the Regular Army, when the Army needs us, with Rank and corresponding pay while on duty, appropriate to our abilities and responsibilities. Furthermore, these same officers have given assurance that the preliminary examinations are not to be designed to keep men out of the Service, but to help them to get in most effectively; i.e., where they fit best. Once entered, it is up to the individual to go ahead or to stand still.

Preparation will not bring war; lack of preparation will not avert it. It is hoped that engineers will avail themselves of this opportunity to become members of the Officers' Reserve Corps.

If enough members from out of town signify their desire to participate, a correspondence course will be arranged.

JOINT MILITARY AFFAIRS COMMITTEE,
J. D. GALLOWAY, Chairman.
ALLEN JONES, Secretary.

P. S. In order that the committee may know just where it stands, you are requested to signify on the enclosed postcard your acknowledgment of the receipt of this circular, and to indicate whether or not you intend to participate.

CREOSOTED WOOD-BLOCKS FOR PAVING FLOORS THAT ARE SUBJECTED TO HEAVY TRUCKING

In an address before the Mid-West Cement Users' Association, W. A. Collings recommended the following method for paving floors of warehouses and other buildings where heavy trucking is necessary. The main body of the floor should be of concrete, but aisles about 6 ft. wide where the trucking is heaviest should be arranged, leaving a space in the concrete 2 in. deep. Creosoted wood-blocks should be placed in this space, with an asphaltic filler. When any blocks wear out they can be replaced, and the floor can be kept in good condition without dust or cutting into the concrete.

A steam-shovel specially equipped for tearing up old street pavement was used recently by the Daniel A. Myers Contracting Co. of Brooklyn, New York. The shovel has a ½-yd. bucket, which is mounted and slides on I-beams that form the boom of the machine. The boom is lowered and its end dropped until it is parallel to the surface. The bucket is then dragged forward, digging its teeth into the material to be moved. When the bucket is full, the boom is raised and turned until the bucket can be dumped into a wagon.

Generated on 2024-09-30 01:23 GMT / https://hdl.handle.net/2027/uiug.30112007838433
Public Domain, Google-digitized / http://www.hathitrust.org/access_use#pd-google
Digitized by Google
Original from UNIVERSITY OF ILLINOIS AT URBANA-CHAMPAIGN

The Goose Lake Valley Irrigation System

By KENNETH A. HERON*

The Goose Lake valley in south-central Oregon consists of about 60,000 acres lying on the east, north, and west sides of Goose lake. It is surrounded on three sides by the Sierra Nevada mountains. Excepting about 6000 acres of low land mostly on the north end of the lake, the greater part of the land in the valley is from 15 to 150 ft. above the lake-level. The country is rolling with a gradual fall from the foothills to the lake. It is well drained and has a good sandy soil. A thick growth of sage-brush originally covered all but the low lands mentioned above. In late years however the land is being cleared for agricultural purposes. Nearly all of the lands in the lower valley can be irrigated from the system of the Goose Lake Valley Irrigation Company.

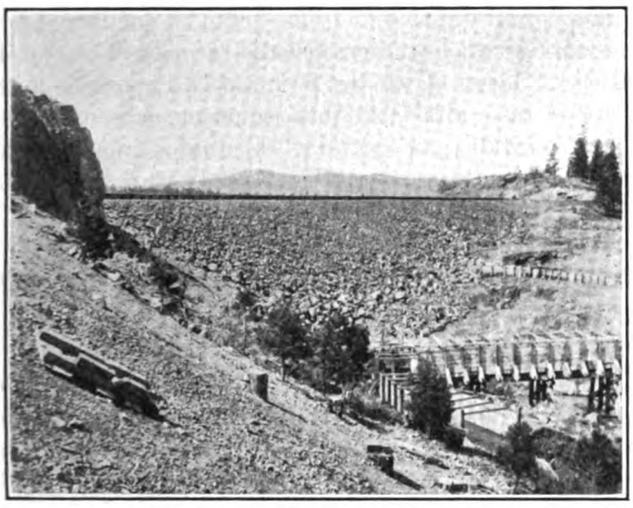

DREWS CREEK DAM AND INTAKE.

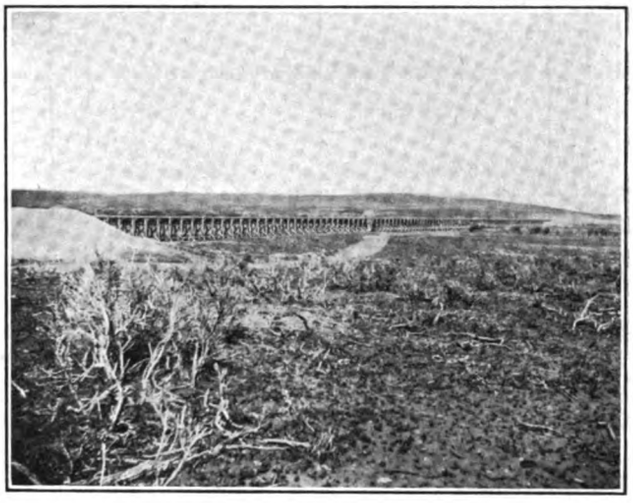

FLUME AT MUDDY CREEK.

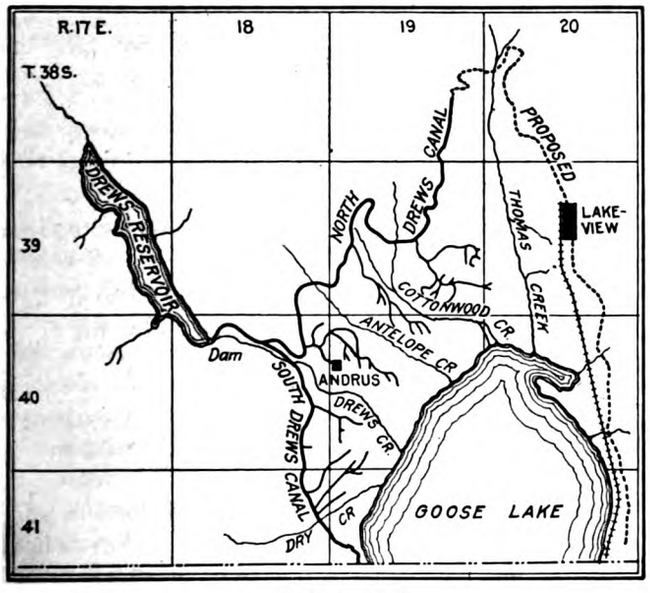

MAP OF PROJECT.

Drews creek, the main tributary of Goose lake has a drainage area of 211 square miles to the west of the main valley. The discharge of this creek is greatest in the early spring. As a rule 80% passes off before the beginning of the irrigation season. In order to hold this water for irrigation purposes a 62,000-acre reservoir has been formed by the construction of the Drews dam at a point on the creek 14 miles south-west of Lakeview. The dam is a rock-fill structure 65 ft. high and 600 ft. long on top. The upstream side of the fill has a slope of $\frac{1}{2}:1$ and is faced with a hand-laid dry-wall 10 ft. thick at the toe and 5 ft. at the top. A covering of double-thickness 2-in. plank is laid on this. This extends 3 ft. above the crown of the fill. It is connected to the canyon sides and bottom by a cut-off wall of concrete and masonry. The crown of the fill is 10 ft. wide and the downstream slope is $1\frac{1}{2}:1$. A spillway 130 ft. wide with its crest 9 ft. below the top of the dam was cut through the rock on the north end of the dam. The outlet from the reservoir is through a tunnel around the south end of the fill.

From the reservoir-outlet, water is taken into the North Drews canal on the north side of the creek in a timber flume spanning the creek. This canal, which will eventually water 75% of the lands under the system, has a capacity of over 500 cu. ft. per second. For the first four miles the canal runs along the north side of the canyon. The material is mainly rock, gravel, and cemented conglomerate. There are five timber flumes 6 ft. high and 12 ft. wide for crossing depressions and in places

*Chief engineer, Goose Lake Valley Irrigation Co., Lakeview, Oregon.

Generated on 2024-09-30 01:24 GMT / https://hdl.handle.net/2027/uiug.30112007838433
Public Domain, Google-digitized / http://www.hathitrust.org/access_use#pd-google
Digitized by Google
Original from UNIVERSITY OF ILLINOIS AT URBANA-CHAMPAIGN

where the topography and class of material would have made excavation particularly expensive. At the mouth of the canyon the canal turns north and runs to a point six miles west of Lakeview. A proposed extension will reach around the north end of the valley and down the east side to the California State line.

A number of semi-circular steel flumes with a radius

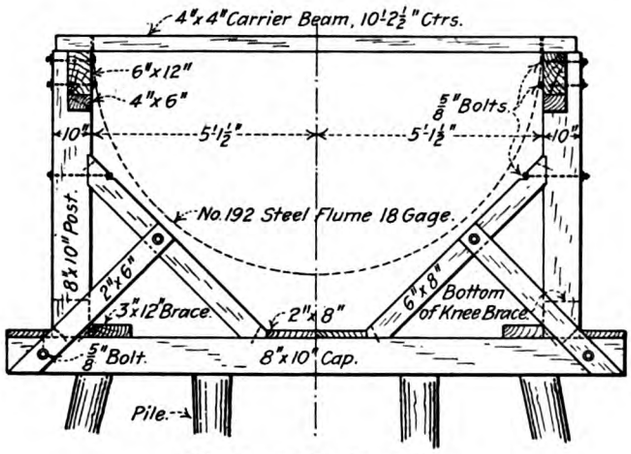

Pile Bents for Steel Flume.

STANDARD STEEL FLUME.

of 5 ft. 3½ in. are used to cross creeks and other depressions, the longest being the Cottonwood flume 2100 ft. A timber-lined tunnel 900 ft. long just west of Cottonwood creek was built to avoid constructing 2½ miles of canal around a high ridge.

The part of the valley south of Drews creek is served by the South Drews canal. On account of the topography of the area irrigated, the South canal is 75 ft. in elevation below the North canal. The intake is on

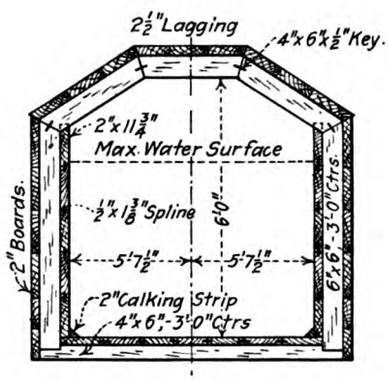

Timber-lined Tunnel

SECTION OF TUNNEL.

Drews creek two miles below the dam. The most important structures on this canal are a number of semi-circular steel flumes, but these are not as large as those on the North canal.

The first land to be irrigated under the system was in 1915, when 300 acres were served. During the past season approximately 100 miles of laterals has been constructed. The distributing system is so planned that it is now possible to reach with extensions any tract under the canals.

For the past 15 years the average annual precipitation in this district has not been over 14 in. Most of this falls between September and May and is of little value to crops. Owing to this lack of moisture in the proper season the grain yield from dry farming is small. From 10 to 20 bushels of barley to the acre and 8 to 12 of wheat is the rule. Forty-one bushels of barley to the acre was obtained by one farmer who irrigated for the first time this season. A yield of from three to four tons per acre of alfalfa obtained this season on one large tract under irrigation has interested the farmers in the possibilities of this crop. It has been almost impossible heretofore to raise alfalfa in this region on account of the lack of rainfall. As the valley is situated in one of the largest range areas in the West a ready market is found locally for all the hay raised.

COMPARATIVE REFLECTING POWERS OF DIFFERENT COLORED SURFACES

The following tables of reflection coefficients, determined by Louis A. Bell, is taken from the report of the committee on industrial lighting at the convention of the National Electric Light Association. The coefficient for a theoretically perfect reflecting surface is 1.

Very faint gray, cream	0.64	Pale gray	0.27
Deep cream	0.60	Light ecru	0.26
Deep buff	0.58	Light green (stripes)	0.26
Deep cream, silvery	0.57	Silvery light green	0.23
Faint ecru	0.55	Light gray green	0.23
Faint greenish	0.53	Pale pink	0.19
Yellow, medium	0.53	Light green	0.18
Light yellow	0.49	Deep yellow, gray	0.15
Light strawberry, silvery	0.49	Medium crimson	0.12
Light bluish	0.47	Light red	0.10
Light strawberry, pink	0.43	Medium red	0.08
Light gray	0.38	Deep green	0.06
Faint yellow, green, gray	0.33	Full green	0.06
Salmon buff	0.33	Deep red	0.05
Pale bluish white	0.31	Silvered mirror	0.90-0.95
Light green and gold	0.28		

Mr. Bell has also determined the intensity of light necessary for the same ease of reading, as follows:

Black	3.28	Light yellow	2.34
Deep red	3.00	Cream, silvery	2.15
Dark green	2.80	White	1.87
Pale blue	2.62		

Patterns cast in metal are required to have a good surface. To secure this, care must be taken not to have the metal too hot. The molds can be of greensand lightly rammed, but should be as dry as possible for proper working. If such a mold is poured with metal too hot, one or other face, probably the bottom, will be bad. The metals usually employed for patterns can be cast at a relatively low temperature, and in fact should be so cast in order to get the best results.—*Mechanical World.*

Generated on 2024-09-30 01:28 GMT / https://hdl.handle.net/2027/uiug.30112007838433
Public Domain, Google-digitized / http://www.hathitrust.org/access_use#pd-google
Digitized by Google
Original from UNIVERSITY OF ILLINOIS AT URBANA-CHAMPAIGN

Timber Framing—Part VIII

By HENRY D. DEWELL*

Timber Columns. From the standpoint of safety of construction alone, the design of a solid timber post to support a concentric vertical load is merely a question of selecting the column formula to be used, and providing the required area as determined by this formula. In this respect, a column is no different from a strut of a timber truss. Column formulas were discussed to some extent in the previous article, and working values may be selected from those formulas.

The ultimate strength of timber columns is not a matter of definite knowledge, because of the lack of sufficient tests on full-sized columns. This is especially true of long columns, for example, columns whose length is from 40 to 60 times the least width. It is interesting to note that the formulas of the American Railway Engineering Association give a value of zero for the safe working stress for a column whose $\frac{L}{d}$ is 60. On the other hand Ketchum would allow a working stress of 480 lb. per sq. in. for this column, and the formula of the U. S. Department of Agriculture, Forestry Division, gives a value of approximately 500 lb. per sq. in. for the same column, when C is taken at 1600 lb. per sq. in. This wide variation in recommended working values is unfortunate, and might cause the layman to believe that the engineer's formulas were worthless. The practical meaning of this variation is that the actual strength of columns with a large $\frac{L}{d}$ is uncertain. Columns with a greater $\frac{L}{d}$ than 20 will generally fail by lateral buckling, a fact which has been definitely proved by tests on full size specimens.

The phenomenon of column action is best established by the Rankin or Gordon formula, and without attempting to go extensively into the mathematics of this 'theoretical' formula, it will be of interest to examine briefly the history and derivation of the component parts of the expression. A full discussion of column action may be found in any standard work on structural mechanics, for example, Merriman's 'Mechanics of Materials,' Church's 'Mechanics of Engineering,' Burr's 'The Elasticity and Resistance of the Materials of Engineering,' and others. The following discussion is presented for the purpose of emphasizing the importance of the effect of eccentric loading, by calling attention to what many engineers are inclined to forget, namely, that bending is an important part of long-column action even with concentric loading. I cannot do better than quote from the text of Burr mentioned above, as follows: "There is a class of members in structures which is subjected to compressive stress, and yet whose members do not fail entirely by compression. The axes of these pieces coincide, as nearly as possible, with the line of action of the resultant of the external forces, yet their lengths are so great compared with their lateral dimensions, that they deflect laterally, and failure finally takes place by combined compression and bending. Such pieces are called 'long columns,' and the application to them, of the common theory of flexure, has been made in Article 24." And from Article 24, "A 'long column' is a piece of material whose length is a number of times its breadth or width, and which is subjected to a compressive force exerted in the direction of its length. Such a piece of material will not be strained or compressed directly back into itself, but will yield laterally as a whole, thus causing flexure. If the length of a long column is many times the width or breadth, the failure in consequence of flexure will take place while the pure compression is very small." Mr. Burr then develops Euler's formula for long columns, which is

$P = \frac{4\pi EI}{L^2}$, where E is the modulus of elasticity and I is the moment of inertia.

"It is to be observed that P is wholly independent of the deflection, that is, it remains the same, whatever the deflection, after the column begins to bend. Consequently, if the elasticity of the material were perfect, the weight P would hold the column in any position in which it might be placed, after bending begins." The above formula is the basis of 'Hodgkinson's formula,' for the resistance of long columns.

"Two different formulas were first established for use in estimating the resistance of long columns; they are known as 'Gordon's formula' and 'Hodgkinson's formula.' Neither Gordon nor Hodgkinson, however, gave the original demonstration of either formula. The form known as Gordon's was originally demonstrated and established by Thomas Tredgold—while that known as 'Hodgkinson's formula' was first given by Euler. In 1840, however, Eaton Hodgkinson, F.R.S., published the results of some most valuable experiments made by himself on cast and wrought-iron columns—and from these experiments he determined empirical coefficients applicable to Euler's formula, on which account it has since been called Hodgkinson's formula. Mr. Lewis Gordon deduced from the same experiments some empirical coefficients for Tredgold's formula, since which time it has been known as Gordon's formula."

With this brief history of the origin of these famous column formulas, we may go at once to the derivation of Gordon's formula for long columns. "Since flexure takes place if a long column is subjected to a thrust in

*Consulting engineer, Holbrook Bdg., San Francisco, formerly Chief Structural Engineer, Panama-Pacific International Exposition.

Generated on 2024-09-30 01:25 GMT / https://hdl.handle.net/2027/uiug.30112007838433
Public Domain, Google-digitized / http://www.hathitrust.org/access_use#pd-google
Digitized by Google
Original from UNIVERSITY OF ILLINOIS AT URBANA-CHAMPAIGN

the direction of its length, the greatest intensity of the stress in a normal section of the column may be considered as composed of two parts. In fact the condition of stress in any normal section of a long column is that of a uniformly varying system composed of a uniform stress and a stress-couple. In order to determine these two parts, let S represent the area of the normal cross section; I, its moment of inertia about an axis normal to the plane in which flexure takes place; r, its radius of gyration in reference to the same axis; P, the magnitude of the imposed thrust; f, the greatest intensity of stress allowable in the column; and D, the deflection corresponding to f. Let p' be that part of f caused by the direct effect of P, and p'' that part due to flexure alone. Then, if h is the greatest normal distance of any element of the column from the axis about which the moment of inertia is taken, by the common theory of flexure,

$$c'PD = \frac{p''I}{h}; \text{ therefore } p'' = \frac{c'PDh}{I}$$

Also,

$$p' = \frac{P}{S}, \text{ therefore } p' + p'' = f = \frac{P}{S}\left(1 + \frac{c'SDh}{I}\right)$$

Hence,

$$P = \frac{fs}{1 + \frac{c'SDh}{I}}$$

This equation may be considered one form of Gordon's formula.

Burr then shows that $D = a\frac{L^2}{h}$, in which expression a is a constant. Making this substitution, and expressing I in terms of S and r, there results the formula,

$$P = \frac{fs}{1 + a\frac{L^2}{r^2}}$$

The preceding treatment illustrates clearly that column action, for long columns, or, as has been stated, for timber columns whose length is greater than twenty times the least cross dimension, consists of a uniform compression plus a cross-bending. Since there is a flexural stress on such columns for concentric loads, it is obvious that the addition of bending moment due to eccentric loading decreases the strength of the column, and that the proportion of flexural stress to the total stress for eccentrically loaded columns is greater the longer the column in proportion to its least width. Further, it may be said that eccentrically loaded columns are in the realm in which the fewest tests for strength have been made. It follows, then, almost as an axiom, that eccentrically loaded columns should be avoided wherever possible, and that where they must be used, careful consideration of the maximum combined unit-stress must be made in order that such maximum unit-stress shall not exceed the safe unit-stress for the column.

Uneven ends on columns, or ends not exactly normal to the axis of the stick will produce eccentricity. In fabricating steel columns, care is always taken to mill the ends of the column to a true and even bearing, and the bearing or base plates are usually planed to an even surface and a uniform thickness. On the other hand, the timber column even though it may carry heavy loads, as in warehouse or heavy mill-construction, is at best trued by a carpenter's square.

The published data on the strength of full-sized timber columns is meagre; practically all of the recorded tests were made by the United States Government at the Watertown arsenal. Undoubtedly some other tests on small columns have been made in technical schools and colleges, but the results of these are not generally known.[1]

In Fig. 63 the ultimate strengths of the timber columns tested at the Watertown arsenal are plotted. These values were taken from the digest of the tests made by

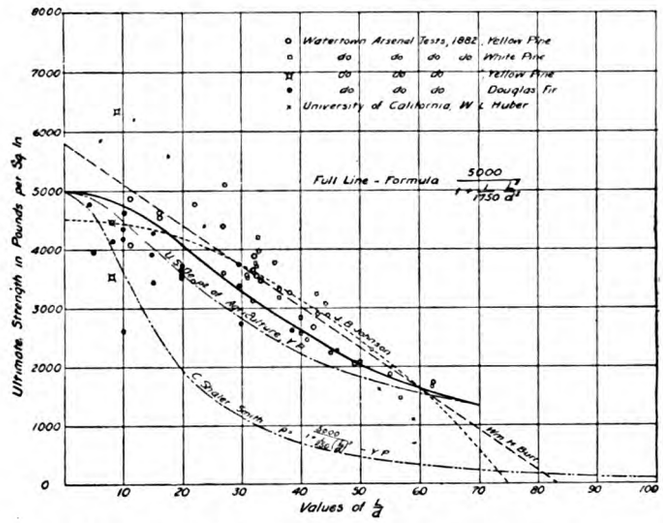

FIG. 63. RESULTS OF TESTS OF WOODEN COLUMNS.

J. B. Johnson and W. H. Burr. As these tests were published in 1882, I have added the results of some subsequent tests made at the same laboratory, also a few tests made by W. L. Huber on small Douglas fir columns, but with a wide variation in the ratio of length to least width. These sticks were 1.7 in. square, and the tests were a part of the regular course in the testing laboratory of the University of California. The Watertown arsenal tests of 1882 were on yellow pine and white pine. The size of these columns varied from 5.3 by 5.3 in. by 27 ft. 6 in. to 8.25 by 8.25 in. by 15 ft. For the case of the white-pine tests, I have arbitrarily increased the recorded values by the ratio 1.52 in order to give more data on the variation of strength with the change in $\frac{L}{d}$. This procedure is in error to some extent; it would be correct only if the ratio of the compressive

[1]For the purpose of bringing together all the recorded tests on timber columns, whether of small or large sticks, I would appreciate the receipt of the results of any tests which the readers of WESTERN ENGINEERING may have or of which they know. Probably a good many engineers have lost or destroyed the notes on their collegiate work in the testing laboratory; in many cases the notes kept may not be in any detail, but any results are of interest. A brief statement of the following facts is desired (1) kind of timber, (2) length of column, (3) size and shape of cross section, (4) rings per inch, (5) moisture coefficient, (6) grade of timber, that is, whether clear or with knots or oblique grain, and 'last but not least,' (7) the ultimate strength and elastic limit.

Generated on 2024-09-30 01:24 GMT / https://hdl.handle.net/2027/uiug.30112007838433
Public Domain, Google-digitized / http://www.hathitrust.org/access_use#pd-google
Digitized by Google
Original from UNIVERSITY OF ILLINOIS AT URBANA-CHAMPAIGN

strengths of the two timbers was the same as the ratio of the respective moduli of elasticity in bending, and if the moduli of elasticity bore a constant relation to the respective compressive strength throughout the range of the tests. It will be seen, by referring to Plate I of the first article of the series that the ratio of the compressive strengths of long-leaf yellow pine to white pine is $\frac{6500}{4400} = 1.475$, while the ratio of the respective moduli of elasticity is $\frac{1610000}{1130000} = 1.425$; the average is 1.45. The Watertown arsenal tests on short columns of the same timbers, that is, columns which failed by compression alone with no lateral deflection, showed the average ultimate strength of yellow pine to be 4442 lb. per sq. in., while the same quantity for the white pine was 2414 lb. per sq. in. These figures give a ratio of 1.84. The ratio used (1.52) is the average of the ultimate strengths of the columns with an $\frac{L}{d}$ of 22 and over. The difference between the two figures shows the influence of bending.

Table XV gives the results of some tests on Douglas fir columns published in 'Tests of Metals,' 1896. These results are also incorporated in Fig. 63.

TABLE XV

TESTS ON DOUGLAS FIR COLUMNS*

Least width, in.	Length		$\frac{L}{d}$	Ultimate strength, lb. per sq. in.	Modulus of elasticity
8.12	26 ft.	0.125 in.	38.4	2600	1,651,000
10.12	25 "		29.6	3700	1,875,000
10.04	25 "		29.9	2700	1,785,000
8.18	20 "		29.3	3371	1,704,000
10.10	16 "	8.00 in.	19.7	3500	1,875,000
10.06	16 "	8.00 "	19.9	3700	1,639,000
8.21	13 "	3.75 "	19.5	3600	1,756,000
10.12	12 "	6.00 "	14.8	3900	1,854,000
10.08	12 "	6.00 "	14.9	3400	1,393,000
8.08	9 "	11.8 "	14.9	4249	1,791,000
10.12	8 "	3.90 "	9.9	4312	1,743,000
9.98	8 "	4.05 "	10.0	4138	1,792,000
10.07	6 "	8.13 "	8.0	4100	1,963,000
7.92	6 "	7.98 "	9.9	2600	1,904,000
10.07	4 "	1.94 "	5.1	4626	1,675,000
8.13	3 "	4.00 "	5.0	3988	.....

*Tests of metals, Watertown Arsenal.

Various Formulas for Ultimate Strength. In Fig. 63 are shown some of the various formulas for ultimate strength of yellow-pine timber columns. W. H. Burr, from the results of the Watertown arsenal tests advocates the following straight line formula

$p = 5800 - 70\frac{L}{d}$, p being the ultimate strength in pounds per square inch, this formula to be used only between the limits $20\frac{L}{d}$ and $60\frac{L}{d}$.

On the basis of the same tests, J. B. Johnson proposed the parabolic formula

$p = 4500 - 1.0\frac{L^2}{d^2}$, this formula to be used between the limits $\frac{L}{d} = 1$ and $\frac{L}{d} = 50$. At the latter limit the parabola is tangent to the curve of Euler's formula $p = \frac{4\pi EI}{L^2}$ when $E = 1{,}620{,}000$ lb. per sq. in. This formula is for partially seasoned yellow-pine columns. For dry long-leaf yellow-pine columns, he proposed the formula $p = 6000 - 1.5\frac{L^2}{d^2}$.

The U. S. Department of Agriculture formula, is also shown, with $C = 4500$ lb. per sq. in.

W. H. Burr in his text already quoted, states that some 1200 tests on full sized specimens of square and rectangular yellow-pine columns were made by C. Shaler Smith for the Ordnance Department of the Confederate Government, and that the results indicated that the following formulas represented the ultimate strengths of the columns.

1. For green, half-seasoned sticks answering to the description, 'good merchantable lumber'

$$p = \frac{5400}{1 + \frac{1}{250}\frac{L^2}{d^2}}$$

2. For selected sticks, reasonably straight and air-seasoned under cover for two years and over

$$p = \frac{8200}{1 + \frac{1}{300}\frac{L^2}{d^2}}$$

3. For average sticks cut from lumber which had been in open-air service for four years and over

$$p = \frac{5000}{1 + \frac{1}{250}\frac{L^2}{d^2}}$$

The tables for strength of timber columns as given in Trautwine's 'Handbook' are based on the Shaler Smith formulas. These formulas are of the Rankin or Gordon form. It is of interest to note that the curves of the formulas do not fit any of the tests of the Watertown arsenal, as may be seen by reference to Fig. 63, where the last formula has been plotted.

In Fig. 63, I have plotted a curve of the Rankin-Gordon type which seems best to fit the results of the tests there shown, and find as noted in the figure, that the coefficient a has a value of about 1750 instead of 250, as found by Mr. Smith. As no numerical results of Mr. Smith's tests are to be found, no comment can be made with regard to the difference between his proposed formulas and those of later engineers.

The elastic limit is high in proportion to the ultimate strength in a timber column. The average ratio as measured by the stress-deformation curves of Mr. Huber's tests is about 84%, while on some similar tests on $3\frac{1}{2}$ by $3\frac{1}{2}$ in. redwood columns, I found the proportion about 90%.

On the basis of the proposed column formula,

$$p = \frac{5000}{1 + \frac{1}{1750}\frac{L^2}{d^2}}$$

there is given in table XVI, the ultimate strength of Douglas fir timber columns, for the case of partially seasoned timber of the No. 1 common grade.

Time Element as Affecting the Strength of Timber Columns. No mention has yet been made of the effect

Generated on 2024-09-30 01:25 GMT / https://hdl.handle.net/2027/uiug.30112007838433
Public Domain, Google-digitized / http://www.hathitrust.org/access_use#pd-google
Digitized by Google
Original from UNIVERSITY OF ILLINOIS AT URBANA-CHAMPAIGN

of time on timber; in other words, the effect on the ultimate strength of long-continued loads. This is a quality characteristic of timber alone, as compared to the other materials ordinarily used in construction, and may well be referred to as fatigue, although the term 'fatigue,' as usually understood in a technical sense when applied to metals refers to a different thing, namely, the effect on the strength of the material of a great number of repetitions of loadings, all within the ultimate strength.

J. B. Johnson in his 'Materials of Construction' notes that "Timber is entirely different from other forms of building material in this, that it constantly yields under heavy loads, and will finally fail under little more than half of the load required to break it on a short time test, such as is ordinarily given in a testing machine. R. H. Thurston reported a few time tests on small wooden beams, 1 in. square and 4 ft. long, in the Transactions of the American Association for the Advancement of Science for 1881. He found that 60% of the breaking load would break the beams if left on some nine months* * * the author has made about 75 tests in crushing endwise. * * * Longleaf yellow-pine sticks, 40 in. long and 2 in. square, were cut from a single plank, and these had seasoned three years in the dry. Each stick was dressed to about 1.5 in. square, and then cut into specimens 3 in. long. The alternate specimens were tested in compression endwise in a testing machine, as is ordinarily done, and the strength was found to be exceptionally uniform. The intervening specimens were then loaded in succession, with various percentages of the average ultimate strength of the two adjoining specimens, and these loads left upon them until failure occurred." Mr. Johnson concludes "But little more than one-half the short-time ultimate load will cause a column to fail if left upon them permanently. Or, the ultimate strength of columns under permanent loads is only about one-half the ultimate strength of these same columns as determined by actual tests in a testing machine."

A paper reporting the behavior of timber under long-continued loads was read before the American Society for Testing Materials in June 1909 by H. D. Tiemann. The tests were on twenty beams 2 by 2 by 40 in. of longleaf yellow-pine on a 36-in. span, and were made at the Yale Forest School. An abstract of this paper appears in *Engineering News* for August 26, 1909, Vol. 62, No. 9, pages 216-217.

Mr. Tiemann concluded that "dry longleaf pine beams may be safely loaded permanently to within at least 75% of their immediate elastic limit, provided no increase in dampness occurs, and deflection will ultimately cease (practically) under this load. No perceptible deflection will occur because of the time-effect and loads up to within 20% of the immediate elastic limit. ('Immediate' signifies 'caused by an immediate load or live load as by an ordinary machine-test.') Loads greater than the immediate elastic limit are dangerous, and will generally result in rupture if continued long enough," The length of time necessary to cause such failure is shown to be as small as a year or less. It is evident that the 'critical' load, in either beams or columns, does not correspond to the elastic limit.

Working Strength of Timber Columns. Taking into consideration the adverse effect on the strength of timber of knots or oblique grain, the possibility of uneven end-bearing, eccentricity due to imperfect beam or girder connections, the effect of long-continued loads of large magnitude, and the relatively few tests on full-size sticks of a large ratio of length to least width, a safety factor of $3\frac{1}{2}$ on the basis of ultimate strength as given by the tests quoted above would seem to be the lowest that should be used, and this only for buildings. The factor should be increased to five for unprotected structures, such as bridges or other outdoor construction.

Table XVI also gives the safe unit stresses for buildings based on the modified Rankin-Gordon formula with $a = 1750$, and a safety factor of $3\frac{1}{2}$.

Column Connections. Other conditions than the allowable stress as a column often determine the size of a post in a timber-framed building, for example, the required cross-sectional area at the ends of the post to provide bearing area for the beams, girders, or trusses resting on the post, or the requirement of a general minimum size of column to give the proper stiffness to the building.

Except in the case of columns supporting floors or roof-bays of uniform size, the ideal condition of concentric loading will seldom be realized. Unless care is taken in the detailing of connections, wall columns will usually be loaded eccentrically, producing bending in the

TABLE XVI

ULTIMATE AND WORKING STRENGTHS OF DOUGLAS FIR COLUMNS

Formula: $p = \dfrac{5000}{1 + \dfrac{1}{1750}\dfrac{L^2}{d^2}}$

$\frac{L}{d}$	Strength in lb. per sq. in. Ultimate	Working
10	4740	1355
12	4630	1325
14	4510	1290
16	4350	1245
18	4210	1205
20	4060	1161
22	3910	1120
24	3760	1075
26	3600	1030
28	3450	986
30	3310	946
32	3150	902
34	3020	864
36	2880	823
38	2740	785
40	2620	750
42	2490	712
44	2370	678
46	2260	646
48	2160	618
50	2060	589
52	1960	560
54	1870	535
56	1790	512
58	1715	490
60	1635	421

Generated on 2024-09-30 01:24 GMT / https://hdl.handle.net/2027/uiug.30112007838433
Public Domain, Google-digitized / http://www.hathitrust.org/access_use#pd-google
Digitized by Google
Original from UNIVERSITY OF ILLINOIS AT URBANA-CHAMPAIGN

posts, the amount varying not only with the numerical value of the load and its eccentricity, but also with the nature of the connections. The case of truss connections to posts was discussed in the preceding article, where it was pointed out that many details involve considerable resultant bending.

Figure 64, *a*, *b*, and *c* illustrate details sometimes seen in building designs. The defects in these three details

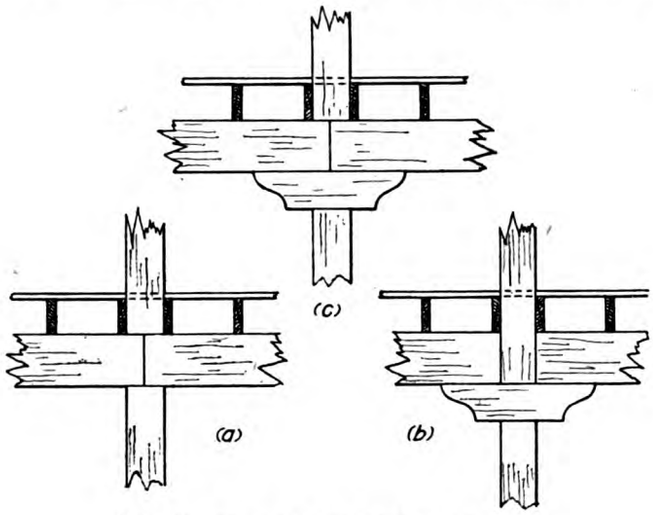

FIG. 64. EXAMPLES OF DEFECTIVE DETAILS.

are self-evident. In *a*, it is almost certain that the girders have not sufficient bearing area to prevent crushing of the fibres. If the upper post is working at an efficient stress, the fibres at the top and bottom of the girders must be stressed above their elastic limit. This condition will produce settlement of the upper floors, which, added to the shrinkage of the timbers, will crack plaster walls, or produce uneven floors.

In Fig. 64 *b* sufficient area for bearing is given to the girders by the bolster, but both the top and the bottom of the bolster are probably over-stressed in cross-bearing. The shrinkage in this case will be that of the bolster only.

Fig. 64 *c* shows the most defective detail. Here the settlement because of shrinkage is the greatest.

With the use of a hardwood bolster, the crushing of the fibres of the bolster may be reduced, and possibly eliminated, although it must be remembered that even oak has an elastic limit across the grain of only approximately 920 lb. per sq. in., for green timber, or about 50% greater than Douglas fir.[2]

To overcome the disadvantages of wooden bolsters, metal post-caps of cast-iron, wrought-iron or steel are commonly employed. Standard post-caps, usually of pressed steel, can be bought in the open market. Typical details of post-cap framing are shown in Fig. 65, the illustration being taken from 'Structural Timber,' Engineering Bulletin No. 2, published by the National Lumber Manufacturers Association. Some of the more common of these post-caps are the Duplex, Goetz, Van Dorn, and on the Pacific Coast, Falls caps, and others. The prices of these vary considerably, and on a large job, it may be possible to build up structural post-caps that will meet the requirements and at the same time be cheaper. Four-way post-caps are open to the objection of resulting in unequal shrinkage, where wooden girders are used, since the joists supported by the girders will drop an amount equal to the shrinkage of the girder, while the joist or beam resting on the post-cap will not drop. This will occur even with the use of joist-hangers, except that where Duplex joist-hangers are used, the shrinkage will be only half of that of the type of hangers which fasten over the top of the girders, as the Duplex joist-hanger is secured to the girder by means of a circular nipple inserted into the girder at slightly above the centre of the depth of the girder.

Where the absence of ceiling will permit, the details of joints shown in Fig. 66, *a*, *b*, *c*, and *d*, will be found, on analysis, to be free from the defects of the connections shown in Fig. 64. The bolster-blocks are either dapped into the lower post, or bolted and keyed. In either case, they have end bearing, while their section may be large enough to provide ample bearing for the girders. Where the size of posts decreases with the succeeding stories, the trimmings of the end of the lower post to the section of the upper post will ordinarily provide sufficient area for the bearing of the bolster blocks. The size of the bolts in Fig. 66, *a* and *b*, may be determined by taking moments about the centre of the lower bolster bearing. Thus, in Fig. 66 *a*, neglecting the effect of the lower bolts, because of their short distance above the end of the bolster, the tension in the upper bolts may be found from the equation

$$T = \frac{Pa}{h},$$

where P is the reaction of the girder, a is the horizontal distance from the centre of the upper end of the bolster to the centre of the gain in the post, and h is the dis-

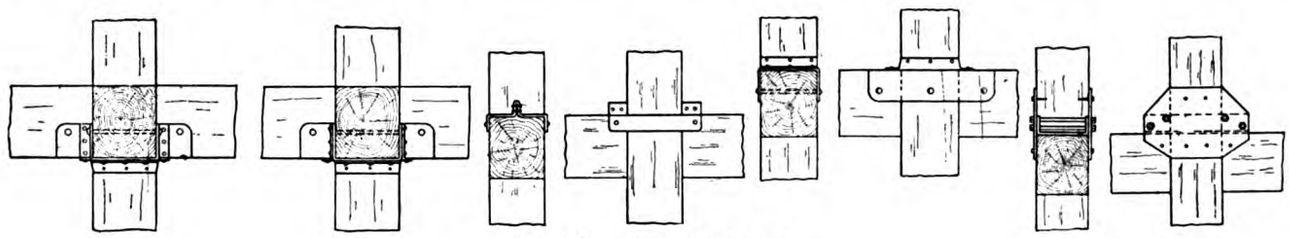

FIG. 65. POST-CAP DETAILS.

[2]These values are from the table of unit stresses adopted by the American Railway Engineering Association, as given in Table I of the first article of this series.

Generated on 2024-09-30 01:32 GMT / https://hdl.handle.net/2027/uiug.30112007838433
Public Domain, Google-digitized / http://www.hathitrust.org/access_use#pd-google
Digitized by Google
Original from UNIVERSITY OF ILLINOIS AT URBANA-CHAMPAIGN

tance from the upper bolts to the lower end of the block. The working stress for the circular keys or pins may be taken from the tests mentioned in the preceding articles. Pipe pins, 2 in. external diameter, and of extra-heavy section may be considered good for 800 lb. per lin. in. of pin. Oak, as has been shown, is practically worthless, and the same is true of gas-pipe. The bolts should be designed to take a tension equal to the reaction of the girder.

It will be noted that in these details, the normal spacing of the joists has been modified at the post, to provide a joist at either side of the post. This is an inexpensive way to secure considerable stiffness in the building. The two joists are to be either spiked or bolted to the post, as the requirements for stiffness may warrant. In Fig. 66 *d* the girders are shown tied together across the column by means of two wooden splice pads. The two sections of posts may be similarly tied together by the use of splice-pads, with fillers under them, of the thickness of the girder-splices. A one-inch thickness of girder-pad will usually give sufficient tie, if it is long enough to give the required spiking or bolting area.

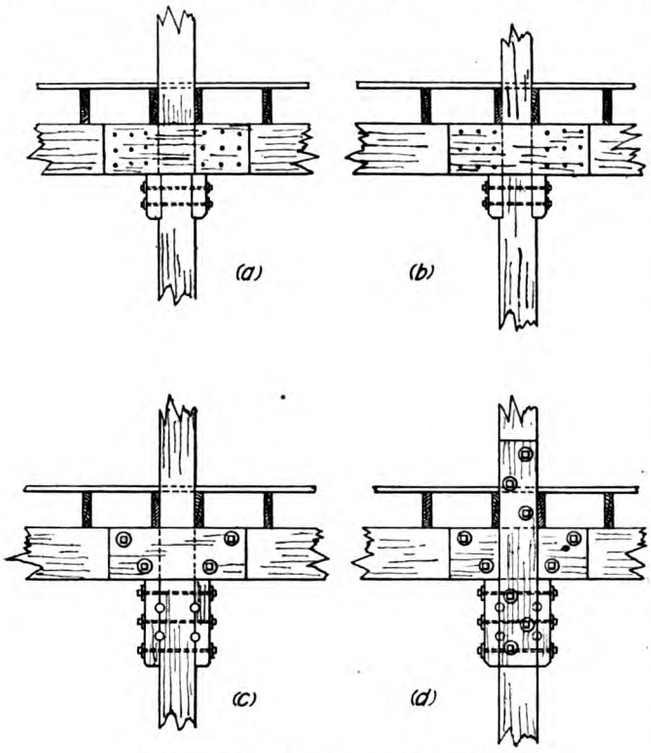

FIG. 66. RECOMMENDED JOINT DETAILS.

Connection of Joists to Girders. The cheapest and most satisfactory manner of supporting floor joists is to rest them upon the girders. There is no device that is as satisfactory as putting the support directly under the load, without resorting to bending or shearing of metal. In buildings with wooden or corrugated-steel walls, the extra height of building and consequent expense resulting from this form of construction will be justified. On the other hand, in the case of a building with masonry walls, and several stories high, resting the floor joists on top of the girders in place of attaching them to the girders by means of metal hangers may add six or seven feet to the height of wall. From the standpoint of cost of construction alone, the cost of the extra walls may be considerably more than the cost of the necessary joist-hangers.

The danger of unequal shrinkage resulting from the use of hangers has been mentioned. On the other hand, where all the joists rest upon the girders directly, while the floors will settle uniformly through shrinkage, the floors will not remain level, since the wall-bays will drop at their inner ends the amount of the girder shrinkage plus the joist shrinkage, and the outer or wall ends will settle the amount of the joist shrinkage alone.

Where it is found necessary or advisable to employ joist-hangers, special hangers may be designed, or some of the standard makes on the market may be used. The standard makes may be divided into two classes, those of the duplex type which, as has been mentioned, are secured to the girders by means of an inserted nipple, and those which fasten by arms or straps which fit over the tops of the girders. The two types are illustrated by Fig. 67 and 69.

Joist-hangers should not be used indiscriminately, that is, without investigation as to their fitness for the particular case, and their ability to withstand the particular loads. *Engineering News* of November 20, 1902, Vol. 48, page 420, describes the collapse of a building in Minneapolis through failure of joist-hangers, although these were of special design, and not standard hangers. The late F. E. Kidder discusses the general question of joist-hangers, in connection with this failure, in the subsequent issue of January 15 and February 5, 1903, Vol. 49, *Engineering News*. Kidder notes several tests as follows: (1) a standard hanger of the second class mentioned above made of $\frac{3}{8}$ by $2\frac{1}{2}$-in. wrought iron, which failed at 13,750 lb., or a unit stress in tension on the iron of 7333 lb. per sq. in.; (2) a Van Dorn hanger (type 2), where the arms began to straighten out at 13,300 lb., and failed at 18,750 lb.; (3) a double stirrup of $\frac{3}{8}$ by $2\frac{1}{2}$-in. wrought iron carrying two 8 by 12-in. timbers over one 12 by 14 in. failed at a load of 28,825 lb. on each side, or at a tensile stress of 15,273 lb. per sq. in.; (4) a duplex No. 35 hanger with a nipple $2\frac{7}{8}$ in. in diameter and $3\frac{1}{2}$ in. long, broke under a load of 39,950 lb. The bearing under the lower half of the nipple was 1977 lb. per sq. in., yet the compression on the wood and the effect on the girder was slight. The hanger failed by breaking of the iron directly under one of the nipples. Another duplex hanger of the same size failed at 38,000 pounds. These hangers are shown in Fig. 68.

Kidder points out that the first point of weakness in a joist-hanger of the stirrup type is the bending of the top strap, and the crushing of the fibres on the joist side of the top of the girder; the second point of weakness is the bending of the bottom of the stirrup supporting the joist, or the tendency to shear. The tests quoted above show that the metal of a joist-hanger does not fail by direct tension.

Referring to the first test noted by Kidder, the equiva-

Generated on 2024-09-30 01:28 GMT / https://hdl.handle.net/2027/uiug.30112007838433
Public Domain, Google-digitized / http://www.hathitrust.org/access_use#pd-google
Digitized by Google
Original from UNIVERSITY OF ILLINOIS AT URBANA-CHAMPAIGN

TABLE XVII

STRENGTH OF JOIST-HANGERS*

Size of hanger, in.	Size of material, in.	Initial load, lb.	Maximum load, lb.	Safe load on beam, lb.	Safety factor on initial failure	Tensile stress in steel at maximum load, lb. per sq. in.	Unit bearing pressure across grain on joist at maximum load, lb. per sq. in.
2 by 6	$\frac{1}{8}$ by $1\frac{3}{4}$	5,270	17,460	1,410	3.74	20,000	2,500
2 by 10	$\frac{3}{16}$ by $1\frac{3}{4}$	12,150	20,120	3,940	3.09	15,300	2,870
2 by 12	$\frac{3}{16}$ by 2	7,470	24,110	5,700	1.31	16,000	3,000
3 by 12	$\frac{3}{16}$ by $2\frac{1}{4}$	23,530	28,730	8,540	2.75	14,000	2,130
4 by 10	$\frac{1}{4}$ by $2\frac{1}{4}$	19,070	28,270	7,890	2.42	12,600	1,570
4 by 12	$\frac{1}{4}$ by $2\frac{1}{2}$	16,980	36,250	11,380	1.49	14,500	1,810
6 by 10	$\frac{1}{4}$ by 3	25,910	34,650	11,800	2.20	11,500	962
6 by 12	$\frac{3}{8}$ by 3	34,840	52,650	17,100	2.04	11,650	1,460
10 by 14	$\frac{3}{8}$ by $3\frac{1}{2}$	24,730	54,450	35,300	....	10,400	777

*The above relation between the safe load on the beam and the 'Initial load' is believed to be a correct interpretation of the results as given by the report. In both reports, the load for one hanger is not given directly. The loads given under 'Initial load' and 'Maximum load' are the total loads sustained by two single hangers. Without a careful reading of the description of the tests, the numerical results might be misleading.

The computed unit bearing pressures across the grain of the joists do not exist; they are calculated on an assumption of uniform bearing, to show that the practical capacity of the hanger, as would be limited by its use with Douglas fir, would be far below that of the maximum loads given.

lent load on the 6 by 12-in. beam would be 26,000 lb. A 6 by 12-in. beam on a 10-ft. span is good for 17,100 lb. at a maximum fibre stress of 1800 lb. per sq. in.; the safety factor was therefore approximately $1\frac{1}{2}$. The double stirrup of $\frac{3}{8}$ by $2\frac{1}{2}$ in. failed at 28,825 lb. on each

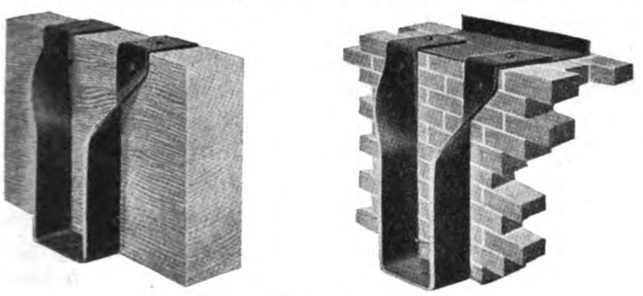

FIG. 67. TYPES OF JOIST HANGERS.

side, or at an equivalent load on the beam of 57,650 lb. An 8 by 12-in. beam on a 10-ft. span will carry 22,800 lb.; the safety factor was therefore $2\frac{1}{2}$.

In a catalogue of a standard joist-hanger there is published the result of some tests made for the company by a firm of testing engineers. The letter from the engineer is reproduced in the catalogue, and I quote the following significant statement: "The joist-hangers being tested on this occasion were taken from their regular stock, and of the following sizes, 2 by 12-in. and 4 by 12-in. They were mounted on heavy headers *with thin pieces of plate to prevent the arms from crushing the rough pine used and in order that the strength of the hanger could be tested, and not the lumber.*"

In the same catalogue is published a similar letter of later date, embodying the results of further tests. These results are given in Table XVII, in which I have also noted the equivalent load that the corresponding beam would stand with a 10-ft. span at a maximum fibre stress of 1800 lb. per sq. in., and the safety factor of the beam at the initial load (load at which the arm of the hangers began to rise). Certain extracts of the letter are also quoted as follows:

"All of the above hangers were mounted on eucalyptus timbers,[3] adhering as near as possible to the usual form of construction, and were spiked to the headers, after which the joists were dropped into place.

"Two readings were taken: The first one (initial load) at the moment the arm of the hanger began to rise, and the final (maximum load) when the arms straightened, and the timbers crushed so that further recording was useless. Crushing of the timbers occurred when testing the 6 by 12-in. and 10 by 14-in. sizes."

The values in the table representing the unit bearing-pressures on the bottom of the joists are not necessarily the correct values; in fact, it is certain that they are incorrect. The values there given are computed on the basis of an even distribution of loading over the seat of the hanger. This condition probably existed in no case, but the values for the thin joist are more nearly correct than for the thicker joists, as the ratio of thickness of metal to thickness of joist (span of seat of hanger acting as a beam) is much greater than in the case of the large joists. In the latter instances, the pressure would all be concentrated at the sides of the joist, and the unit pressure may have been three or four times that given in the table.

One other point is of interest to mention, in connection with Kidder's report of the test of the duplex hanger. He states, as was noted, that the unit bearing-pressure of the $2\frac{7}{8}$ by $3\frac{1}{2}$-in. circular nipple was 1977 lb. per sq. in. at the time of failure, with but small effect in compression on the wood. H. S. Jacoby, in his 'Structural Details' notes with respect to the duplex or Goetz hanger, "it may be assumed, according to the results of tests, that the safe load is limited only by the safe bearing-

[3] I am unable at this writing to give the ultimate unit compressive stress across the fibres for eucalyptus, but it is undoubtedly quite high. The results of the tests on the hangers are not therefore directly applicable to Douglas fir, as the safe strength of a joist-hanger is just as much a question of the capacity of the timber as of the hanger.

Generated on 2024-09-30 01:27 GMT / https://hdl.handle.net/2027/uiug.30112007838433
Public Domain, Google-digitized / http://www.hathitrust.org/access_use#pd-google
Digitized by Google
Original from UNIVERSITY OF ILLINOIS AT URBANA-CHAMPAIGN

FIG. 68. JOIST-HANGERS AFTER TESTING.

value of the cylindrical bearing surfaces on the sides of the fibres of the supporting beam. As shown, the effective bearing area equals the horizontal projection of the cylindrical surface when the direction of pressure is perpendicular to the fibres." If the average unit pressure of a cylindrical metal pin be taken as the limiting pressure perpendicular to the grain, the nipple of the hanger (for longleaf pine) would have crushed the girder at a load of 10,500 lb. for green timber, and possibly 15,000 lb. for dry timber. This is additional evidence that such a consideration of cylindrical bearing is in error, as discussed in the second article of this series. On the basis of the theory there proposed, Kidder's computed unit bearing-pressure would represent approximately the elastic limit of the timber.

CALCULATIONS

Capacity of two circular nipples, $2\frac{7}{8}$ by $3\frac{1}{2}$ in., according to usual method $= 2 \times 2\frac{7}{8}$ in. $\times 3\frac{1}{2}$ in. $\times$ 520 lb. per sq. in. $\times$ 1.50. (Increase of 50% for probable condition of seasoned timber; value of 520 lb. per sq. in. is from Table I, Article I, for longleaf pine, green condition of timber, elastic limit in compression across the fibre) $=$ 15,650 pounds.

Capacity of same nipples by method of Article II $= 2 \times 2\frac{7}{8}$ in. $\times 3\frac{1}{2}$ in. $\times [(\frac{2}{3} \times 520) + (\frac{1}{3} \times 3500)] \times 1.50 =$ 45,600 lb. (The figure 3500 is the elastic limit for green longleaf pine, as taken from Forest Service Bulletin 88.) The actual load on the hanger as tested was 39,950 pounds.

Mill Construction. The preceding discussion and the illustrations of details have not considered the question of fire risk, and some of the details are open to criticism from this standpoint. This subject is one that is treated to considerable extent in Kidder's 'Pocket Book,' and in other books. Engineering Bulletin No. 2, of the National Lumber Manufacturer's Association, entitled 'Structural Timber, Heavy Timber Mill Construction Building,' dealing with this construction, has been issued recently. Valuable information, including many tables for strength of timber structural members, is also given in the 'Structural Timber Hand Book on Pacific Coast Woods,' published by the West Coast Lumbermen's Association, with headquarters at Seattle.[4]

From the standpoint of fire-protection in buildings with a timber-framed interior construction, and brick walls, it is advisable to have all sections of beams, girders, and posts of as large section as practicable, even at the cost of economy in framing. Beams framing into walls should be self-releasing in case of fire, so that if the timber beams burn and fall, they will not pull the wall with them. Similarly, many standard post-caps are designed with the idea that the girders will pull out of their seats, if they burn and fall, without pulling down the post with them. It may be of interest to quote the definition of mill construction from the bulletin of the National Lumber Manufacturers' Association. This type of construction is divided there into three classes as follows:

"1. Floors of heavy plank laid flat upon large girders which are spaced 8 to 11 ft. on centres. These girders are supported by wood posts or columns spaced from 16 to 25 ft. apart. This type is often referred to as 'Standard Mill Construction.'

"2. Floors of heavy plank laid on edge and supported by girders which are spaced from 12 to 18 ft. on centres. These girders are supported by wood posts or columns spaced 16 ft. or over apart, depending upon the design of the structure. This type is called 'Mill Construction with Laminated Floors.'

"3. Floors of heavy plank laid flat upon large beams which are spaced from 4 to 10 ft. on centres, and supported by girders spaced as far apart as the loading will allow. These girders are carried by wood posts or columns located as far apart as consistent with the general design of the building. A spacing of from 20 to 25 ft. is not uncommon for columns in this class of framing where the load is not excessive. This type is more generally known as 'Semi-Mill Construction'."

Also, from the Building Code Recommended by the National Board of Fire Underwriters:

"Wooden girders or floor timbers shall be suitable for

[4]Both of these publications are of great value to those engaged in timber construction; the former for its presentation of the requirements of mill construction in accordance with the standards of the National Board of Fire Underwriters, and the latter for its many tables of strength of beams and columns. The 'Structural Timber Hand Book' was reviewed recently in WESTERN ENGINEERING.

Generated on 2024-09-30 01:24 GMT / https://hdl.handle.net/2027/uiug.30112007838433
Public Domain, Google-digitized / http://www.hathitrust.org/access_use#pd-google
Digitized by Google
Original from UNIVERSITY OF ILLINOIS AT URBANA-CHAMPAIGN

the load carried, but in no case less than 6 in., either dimension, and shall rest on iron plates on wall ledges, and where entering walls, shall be self-releasing. Walls may be corbelled out to support floor timbers where necessary. The corbelling shall not exceed 2 inches.

FIG. 69. DUPLEX JOIST-HANGER.

"So far as possible, girders or floor timbers shall be single sticks. Width of floor bays shall be between 6 and 11 feet.

"The practice in mill-construction of supporting the ends of beams on girders by means of metal stirrups or bracket hangers is objectionable. Experience has shown that such metal supports are likely to lose their strength and collapse when attacked by fire.[5]

"Floors shall not be of less than 3 in. ($2\frac{3}{4}$ in. dressed) flooring laid crossways or diagonally."

USE OF TRAILERS IN AUTOMOBILE SERVICE*

The first trailers in general use in connection with automobile trucks were horse-drawn wagons remodeled by changing the type of tongue. A two-ton truck could readily haul an extra ton on one of these wagons without much effort. Some difficulty, however, was experienced through the required low speed due to the type of box bearings on the wagons. It had been the custom of the Southern California Edison Co. to dispose of its obsolete automobiles for the nominal sum of $50 to $100. The idea presented itself to convert some of the old cars to trailers, as they were all equipped with roller bearings and rubber tires. Six roadsters that had been condemned for use on account of excessive cost of operation, were dismantled, the driving parts removed and sold, and suitable bodies were installed upon the running gears. These trailers were used in conjunction with automobiles having a capacity of 1500 lb. or less. Using a trailer allowed more room on the motor-driven vehicle for the men, since all extra material needed for the different jobs during the day was carried on the trailer, and the trailer could be dropped at different points along the line where the men were at work. This released the motor car so that if it were necessary to send to the district stores for additional material or any other special use that might arise, the supplies and tools were always at hand.

When hauling six or seven tons a trailer was used capable of handling four or five tons, which in addition to the amount carried on the truck made the usual maximum capacity sent out by the warehouse. It was, however, necessary to move transformers and other large quantities of different materials weighing as high as fourteen tons and we experienced difficulty in securing trailers having a capacity to take care of this load and at the same time to roll freely enough so that one of our light trucks could haul it. It was also desired to secure a trailer on which the body was not too high from the ground. It was therefore decided to build, from our own specifications, a four-wheel trailer capable of carrying any load which we might have to transport. This trailer was built and the following figures will serve to give an idea as to its size:

The length of the bed is 15 ft. and width 5 ft. The flooring is $1\frac{1}{2}$ by 6-in. clear maple, and the frame is made of four 6 by 8-in. clear Oregon pine timbers. The rear axle is $4\frac{1}{8}$ by $4\frac{5}{8}$ in. The rear wheels are equipped with the largest size Timken bearings obtainable on the Coast and has 12 by 42-in. rubber tires. The front axle is $3\frac{1}{4}$ by 4-in. steel arched over the timbers similar in design to the old horse-drawn trucks. The front wheels are also equipped with Timken bearings and have 8 by 36-in. rubber tires. The arching of the front axle allows the top of the bed to be approximately 24 in. from the ground and gives a road clearance of about 10 inches.

This trailer has proved to be very serviceable. The first load carried was three 400 k.v.a. transformers from the Ocean Park sub-station to the general store. These transformers weigh 8300 lb. each. Three of these on the trailer and two tons of transformer oil in drums on the motor truck, made a total load of over 14 tons. The The motor truck that hauled these has a capacity of two tons and has a worm drive with a gear ratio of nine and one-quarter to one. The trip from Ocean Park to Los Angeles was made in $4\frac{1}{2}$ hours and was without any particular incident other than that of having gone the entire distance on high gear with the exception of one small hill on which it was necessary to use the second. Special attention was paid to the effect of this load on the roads. Because of the width of the rear tires, no mark whatever could be seen on the pavement. We have, however, found that several small towns in southern California have arbitrarily placed a limit of 21,000 lb. as the combined weight of load and vehicle that can be used on their streets.

Another feature which might be mentioned as an argument in favor of trailers is that of the elimination of the cost of crating and marking material.

[5]No difference in insurance rate, however, will be made for this factor alone.

*Abstracted from *Edison Current Topics*.

Generated on 2024-09-30 01:27 GMT / https://hdl.handle.net/2027/uiug.30112007838433
Public Domain, Google-digitized / http://www.hathitrust.org/access_use#pd-google
Digitized by Google
Original from UNIVERSITY OF ILLINOIS AT URBANA-CHAMPAIGN

Flow of Water in Wood-Stave Pipe

Bulletin No. 376 of the United States Department of Agriculture on 'The Flow of Water in Wood-Stave Pipe,' by F. C. Scobey, which has been issued recently, is based not only upon the published experimental data, but also upon a series of experiments recently conducted by the author. It has long been admitted that Kutter's formula as applied to wood-stave pipe left much to be desired, as the experimental data available show a variation in the value of n that cannot be satisfactorily explained. After discussing the various other formulas that have been suggested, the author derives a new set of formulas as follows:

$$H = \frac{0.419\ V^{1.8}}{D^{1.17}}$$

$$V = 1.62\ D^{0.65}\ H^{0.555}$$

$$Q = 1.272\ D^{2.65}\ H^{0.555}$$

where Q = discharge in cu. ft. per second,
V = velocity in ft. per second,
D = inside diameter of pipe in inches,
and H = the friction loss of head in feet per 1000 lin. ft. of pipe.

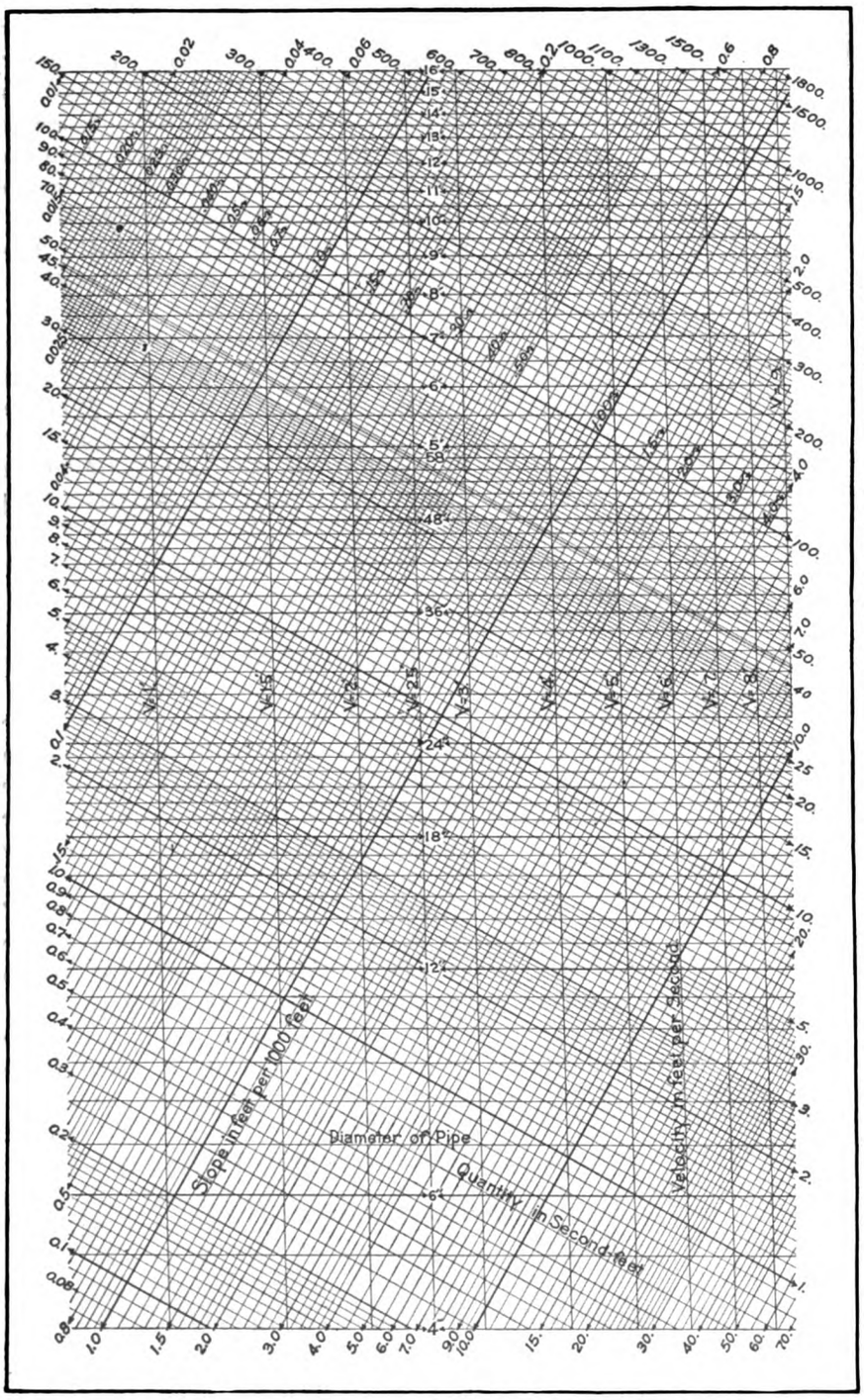

CHART FOR COMPUTING FLOW IN WOOD-STAVE PIPE.

Computations using these formulas can be shortened by the use of the accompanying diagram, taken from the report.

The following factors of safety are recommended in using the formulas:

Five per cent when only a rough approximation to the actual needs of the pipe is possible; when water enters the pipe from a settling reservoir and velocities in the pipe are so high that a clean-scoured condition will always be present inside the pipe; and also where conditions of operation are such that no penalties are attached to a slight insufficiency of carrying capacity.

Ten per cent when the above conditions for a clean pipe are assured, but where penalties are attached to lack of capacity; or where no direct penalties are attached but silted waters and low velocities may permit deposits and growths of *Spongilla* or other vegetable life.

Fifteen per cent where rock ravelings may reduce the interior area of the pipe or when penalties are attached and silted water or vegetable growth is likely to cause a considerable retardation of flow in the pipe.

There appears to be no definite relation between age and change in capacity, but the results of but one test are available for any pipe older than 7 years. This pipe, a 24-in. line near Ogden, which was 24 years old when tested, has a carrying capacity 3% greater than would be expected from the formula.

Generated on 2024-09-30 01:25 GMT / https://hdl.handle.net/2027/uiug.30112007838433
Public Domain, Google-digitized / http://www.hathitrust.org/access_use#pd-google
Digitized by Google
Original from UNIVERSITY OF ILLINOIS AT URBANA-CHAMPAIGN

Reduction of Seepage Losses in a Canal Through Porous Shale*

By J. H. MINER†

The main canal of the Grand Valley project follows for the greater part of its length along the edge of shale hills, and the wetted perimeter is largely in shale.

The shales vary from a heavy, dark blue to light gray. The dark blue shale is difficult of excavation and comes out in irregular blocks in sizes up to 10 cu. ft. This shale has proved to be water-tight, but only a small amount was encountered in construction. The gray shale is much disintegrated and in general is broken by many nearly horizontal seams and vertical fissures. In this condition it is porous. Excessive losses of water were experienced in the older canals in the Grand valley in sections traversing this kind of material. The result was waterlogging of areas below the canal and frequently such an accumulation of alkali as to prevent plant growth.

The prevention of excessive losses by percolation was given consideration before beginning the construction of the main canal of the project. Lining with concrete was not considered feasible, since these shales swell when wetted so that concrete lining might be expected to become cracked and inefficient. The protective measures adopted consisted in excavating the canal through shale to a depth of 1 ft. below the required grade, with the object of allowing silt to accumulate in this extra depth. When cleaning becomes necessary, the silt in this section will not be disturbed. At some points where especially porous shale was encountered, the canal section was excavated with one-half to one side-slopes below the normal water-level. In this way a triangular section was formed on either side of and outside of the required water section. These triangular areas were later filled with good surface-soil from the top of the slope. Part of the earth lining was placed before water was turned into the canal and part afterward. The work done with the water in the canal was the more effective in that the material was better and more quickly consolidated and also spread farther on the canal bottom.

Earth lining or artificial silting was necessary in this case, because the Grand river carries little silt. During 1915 the river was practically clear, and seasoning and priming work on the canal was performed at a disadvantage. During 1916 the river has carried an unusually large amount of silt. However, a sample of water taken from the canal at the headgates when the quantity of silt appeared to be at a maximum showed only ¼% by volume. This silt is finely divided, so that on inspection one is apt to overestimate the amount. In comparing the water of the Grand river with that of the Colorado at Yuma, and the Rio Grande at San Marcial, New Mexico, I find that the maximum of silt observed in the Grand river at Palisade was only 4¼% of the maximum observed in the Rio Grande, and 14% of the maximum observed in the Colorado.

The local shales disintegrate readily on exposure to air and moisture. Advantage was taken of this property by plowing and harrowing the shale portions of the canal bottom in the fall of 1915 after water had been run in the canal. The upturned shale was left exposed through the winter, and in the spring was again stirred with a heavy harrow to assist nature further in the breaking process. The shale has a tendency to break into flakes that do not consolidate readily. A so-called 'goat' was devised to hasten the consolidation. It resembles a land roller, or pulverizer, except that the face of the rolls is provided with projections about 3 in. long, 2 in. diam. at the tip, and spaced about 6 in. apart in each direction. The 'goat' is hauled repeatedly over a given area and has the effect of trampling animals. It apparently made the canal bottom more compact, but no data have been secured to show directly what its effect might have been in reducing losses by percolation. This 'goat' was delivered only a short time before water was turned into the canal in the spring of 1916, and consequently it was used on a small part of the canal length.

Data to show the effect of our operations in reducing conveyance losses have been collected for the three periods June 1 to 5, July 17 to 21, and August 27 to 31, inclusive. These data have been computed for three separate sections of the canal and for the whole length of the canal that has been operated.

Section No. 1 extends from the upper gauging station at station 22 to station 906. This section contains only a small portion of shale, and the plowing and harrowing of this shale and the placing of earth lining were completed in 1915. The 'goat' was worked in a portion of this in the spring of 1916.

Station 906 to station 1375 comprises a section which is perhaps 50% in shale. This shale was plowed in the fall of 1915, and earth lining was placed in the late fall and early spring.

The section from station 1375 to station 1965 contains a still greater proportion of shale. This shale was also plowed in the fall of 1915, but not harrowed, and the earth lining in this section was placed during the run of water in the season of 1916, the part beyond station 1850 being still uncompleted. Between stations 1100 and 1660 the canal was greatly benefited by silt brought in by a cloudburst on August 13, which

*From *Reclamation Record*.

†Project manager, Grand Valley project, Grand Junction, Colorado.

Generated on 2024-09-30 01:24 GMT / https://hdl.handle.net/2027/uiug.30112007838433
Public Domain, Google-digitized / http://www.hathitrust.org/access_use#pd-google
Digitized by Google
Original from UNIVERSITY OF ILLINOIS AT URBANA-CHAMPAIGN

broke through the upper bank in a number of places. During the period from July 26 to August 14 the Grand River water carried an unusually high proportion of silt. As much of this water was taken into the canal as the conditions at the wasteways would permit.

The tabulation of conveyance losses shows the following results, all losses being given in cu. ft. per sq. ft. of wetted area for 24 hours:

On the section from station 22 to station 906 the average loss during the period from June 1 to 5 was 0.557; for the period from July 17 to 21 this had been reduced to 0.248, and for the period August 27 to 31 to 0.201.

In the section between stations 906 and 1375 the loss increased from 1.007 in June to 1.076 in July, and then decreased to 0.948 in the August period.

In the section from station 1375 to 1965 the loss increased from 1.94 in June to 2.118 in July, and then decreased to 0.588 in August.

The increase in the July period for the second and third sections was probably due to the fact that a greater quantity of water was carried through those sections in July and the upper edges of the wetted area had not become consolidated sufficiently to prevent a considerable amount of seepage.

The variation in the amount of loss in the three sections is further explained as follows: In section No. 1 the work was completed before observations were begun, and the improvement was a result of the deposition of river silt and other natural causes. In section No. 2 a small amount of work was performed during the period covered by the observations, and little effect was obtained from the river-silt. On account of being unable to waste water from the canal without damage to property, it was necessary to limit the volume of flow so that the velocities were low. Hence, practically all the silt was deposited in section No. 1. The reduction in losses in section No. 3 was a result of the large amount of work done on that section during the period covered by the observations, and to the silt deposited by the heavy flow of surface water during storms in the early part of August. Observations on a two-mile stretch of canal through shale where no protective work had been done, showed an average loss of 4 cu. ft. per sq. ft. of wetted area per 24 hours, while for the canal as a whole the loss was only 0.481 cu. ft. per sq. ft. of wetted area. This compares favorably with the conveyance losses given by Etcheverry for all material except impervious clay-loam and medium clay-loam underlaid with hardpan. By local treatment at points of greatest loss it is expected to make a further reduction in the average rate for the first 37 miles of the canal. The remainder of the canal is too far from the headgates to receive any of the silt carried by the river-water. In order to eliminate conveyance losses in this lower part of the canal, it is intended to install a silting plant, using pumps and a hydraulic giant to break up beds of suitable material and get it in suspension in the canal-water.

COST OF A LARGE QUARRY BLAST

The following data regarding the cost of a blast recently fired at the quarry of the Colorado Portland Cement Co. at Portland, Colorado, is taken from *Municipal Engineering*. The quarry face is from 39 to 49 ft. high. The rock is a limestone lying in homogeneous layers from 6 to 28 in. thick, separated by layers of shale up to 8 in. thick. The strata are horizontal and the quarry floor is practically level.

There were 44 holes arranged in four rows, each hole drilled 2 ft. below the quarry-floor level. The holes in the first row were loaded with 1 lb. of powder per 2¼ cu. yd. of rock to be broken. The holes in the other row had 1 lb. powder per 2 cu. yd. rock. Monobel No. 6 powder was used.

Following is a summary of the cost of preparing and firing the blast:

Number of holes	44	
Spacing, average	20 ft.	
Burden, average	20.6 ft.	
Depth, average	45 ft.	
Tons of rock broken	61,182	
Cubic yards	30,213	
Cost of drilling (labor)		$ 261.89
Cost of drilling (power)		24.00
Total cost of drilling		$ 285.89
Total feet of hole	2,094	
Cost per ft. of hole (drilling)		$ 0.1317
Cost per ton of rock (drilling)		0.0064
Charge of powder per hole	265 to 425 lb.	
Amount of Monobel powder in blast	14,850 lb.	
Amount of giant powder in blast	100 lb.	
Cost of forty-four 42-ft. fuses at $0.1848		$ 8.13
Cost of nine 36-ft. fuses at $0.1632		1.47
Cost of Monobel at $0.125 including freight		1,826.25
Cost of giant at $0.115 including freight		11.50
Cost of shot (powder and fuse)		1,852.39
Cost of shot (drilling and loading)		325.64
Total cost of shot		$2,178.03
Cost per ton of rock (powder and fuse)		$ 0.0302
Cost per ton of rock (drilling)		0.0046
Cost per ton of rock (loading)		0.0006
Total cost per foot of rock		$ 0.0354
Number ft. of powder in all holes	1,294	
Number pounds of powder in shot	14,850	
Number of pounds of powder per ft. of hole from 5⅝-in. bit	12.25	
Amount of rock broken per pound of powder:	4.0 tons 2.03 cu. yd.	

Aerial propellers are being used instead of the ordinary type for some motor-boats that operate on very shallow rivers, according to the London *Times*. One 30-ft. boat drawing only 9 in. of water, has a 15-hp. engine and an aerial propeller 8 ft. in diameter. It tows 15 or 20 shallow-draft barges, each having a capacity of about 2 tons. At the other extreme, an 18-ft. 'skimmer' is equipped with a 50-hp. engine and a two-bladed aerial propeller, and attains a speed of 30 miles per hour.

Generated on 2024-09-30 01:29 GMT / https://hdl.handle.net/2027/uiug.30112007838433
Public Domain, Google-digitized / http://www.hathitrust.org/access_use#pd-google
Digitized by Google
Original from UNIVERSITY OF ILLINOIS AT URBANA-CHAMPAIGN

Concreting the Sacramento Shaft at Bisbee

By G. S.

Introduction. It became necessary in 1915 to re-timber, or otherwise secure, a part of the Sacramento shaft, the main hoisting-shaft of the Copper Queen Consolidated Mining Co. Re-timbering would cost less, but a concrete lining would eliminate fire-risk and cut repairs to a minimum.

Either operation, re-timbering or lining with concrete, was complicated by the necessity of hoisting nearly all the ore mined in the Copper Queen mine through this shaft. It was estimated that the required production could be made by hoisting 14 hours per day, leaving 10 hours for work in the shaft.

A general plan and comparative estimates of cost were prepared, and in March 1915, twenty-five feet of shaft was concreted to test the method and estimate of cost. Certain experiments were made at the time to secure information on a few details of operation.

After it was decided to concrete the shaft, a quarry for crushed rock and sand was opened, storage-bins at the shaft were built and forms were constructed. The first 5-ft. section of concrete was poured on October 17, 1915, and the collar set on July 30, 1916. Since then, a ladder-way and a new set of guides for the skip-compartments have been put in, with regard to convenience rather than speed, and the work was finally completed on September 3, 1916.

General Plan. A crushing-plant at the quarry produced both coarse rock and the fine material used as sand.

There is no railroad-track above the Sacramento shaft. The sand and rock were brought to the shaft by railroad, and there elevated to storage-bins. It was trammed to the concrete-mixer through an adit-level 71 ft. below the shaft-collar. The mixer was placed below the adit-level, in a set adjoining the fifth or pipe-compartment of the shaft. After mixing, the concrete was dropped into a hopper and through a 4-in. pipe in the fifth compartment to the forms below.

The lining was made at three different points alternately to give time for the concrete to set properly before the forms were stripped. This was to permit single sets of forms to be used, as was found most convenient.

The skips and cages were fitted with top decks to work from, and additional temporary bonnets were clamped to the ropes above for safety. When the timbers were removed, they were dropped into the skips or lashed on the cages, and taken to the surface when convenient. This was believed to be safe with the powerful hoisting-engines operating them, and avoided the use of working-stages, which would have taken too much time to put in and remove.

Quarry and Crushing Plant. In crushing, a considerable quantity of sandy material is produced, which is customarily used to replace a part of the necessary sand. It was believed that by separating with a coarser screen and installing a set of rolls, sufficient sand could be crushed more cheaply than it could be obtained otherwise. Samples of rock crushed through $\frac{1}{4}$-inch screen gave satisfactory results under test. Since it was necessary to open a quarry and provide a crusher, screen, and bins, only the addition of an elevator and rolls were needed to produce sand as well. A 10 by 20-in. jaw-crusher and a set of 15 by 26-in. rolls were obtained from the smelter, and a small plant with elevator and trommel erected.

Power was furnished by a 50-hp. induction motor.

The coarse material having to pass the 4-in. pipe, was reduced to a $1\frac{3}{4}$-in. ring. Material passing a $\frac{13}{16}$-in. ring was sent to the rolls. This did not provide sufficient fine, so holes were increased in number and reamed out to 1 inch. A third product was made passing a $1\frac{1}{4}$-in. ring. Since another elevator would have been required to return the oversize to the rolls, the fine was used as it came. This product contained a good many coarse pieces. It was not convenient to re-screen and send the oversize to the middling-bin, so a greater quantity of fine was used to give sufficient sand. The only difficulty was when mixing small batches, as, for instance, for the concrete beams. Then there was apt to be segregation, and the mixture was uneven. For this purpose, it was screened and the oversize thrown into the middling. In batches of ordinary size for the shaft, no difficulty was encountered.

The quarry was started where rock comes to the surface, and a good working-face was soon obtained. Drilling was done by jack-hammer, one machine breaking all the rock required. Only clean rock was sent to the crusher, earthy material being left on the floor of the quarry. A track, 41-in. gauge, of 16-lb. rails was laid from the crushing-plant to the quarry, and branched to control the whole face. The rock-cars were built broad and low, for convenience in loading. They were dumped by raising the tail end by a compressed-air cylinder.

The rock from the car dropped five feet to the crusher, where there was only storage for a carload or so. The crushed rock dropped into the boot of a bucket-elevator, which raised it and dumped it into a revolving trommel. The fine material from the first section dropped directly to the rolls below, and from them into the fine-bin. The second section delivered the middling product into the second bin, and the third section the coarse aggregate into the third bin. The oversize was returned by a chute to the crusher and continued the circuit.

Transportation. The concrete material was loaded

Generated on 2024-09-30 01:26 GMT / https://hdl.handle.net/2027/uiug.30112007838433
Public Domain, Google-digitized / http://www.hathitrust.org/access_use#pd-google
Digitized by Google
Original from UNIVERSITY OF ILLINOIS AT URBANA-CHAMPAIGN

from the bins into Rodgers ballast cars and switched to the Sacramento shaft.

Storage Bins. The railroad track at the Sacramento shaft is too low to dump the cars into storage-bins from which it could be delivered by gravity to the mixer. A spur was therefore laid over a shallow hopper-bottom bin, holding a carload of rock or sand. A belt-conveyor under the receiving-bin carried it to the foot of an elevator, which lifted it to the top of the storage-bins and delivered it into one of the three compartments. The bins were constructed almost entirely of mine-timbers, framed for ordinary purposes and bolted together. When it is taken down, the timber will have its original value for use in the mine.

The chutes from the storage-bins form measuring-pockets for a batch of concrete. The proportions were determined by customary methods of experiment.

Opposite the bins, a small house was built beside the railroad track for cement storage, and sufficient cement for a section was taken on trucks to the mixer-station immediately before use.

The Mixer was a half-yard Ransome machine, and was set just below the adit-level, in an excavation made for the purpose facing the fifth compartment of the shaft, with the loading-hopper flush with the floor. After mixing, the concrete was discharged into a hopper that formed the whole bottom of the fifth compartment, and connected with the 4-in. pipe. The sides of the hopper were built at 40° from the horizontal, which facilitated feeding better than a steeper angle.

The water was measured in a tub with a quick-discharge valve.

Concrete Pipe-Line. It was impossible to put the concrete line in any one of the central compartments, since they were in constant use; therefore it was placed in the fifth compartment of the shaft. It was inserted at once to the bottom of the shaft, and shortened as the shaft was finished, from the bottom upward. The line was made of 4-in. standard pipe, threaded deep enough to let the end come clear through the flange, and all lengths were faced in a lathe after flanging, to an exact length of 10 ft. The flush joints left no irregularities on the inside surface to start erosion, and by making all pipe lengths 10 ft., any piece could be replaced without trouble. At the upper points of work, a length of pipe was taken out to attach the elbow, and if necessary, a 5-ft. length was slipped in, to deliver the concrete at the proper point above the form.

The shaft was so long that concrete could not be spouted to the forms at the opposite end without great difficulty in handling the spouts. An elbow was therefore attached to the lower end of the column, and the concrete shot to the form by compressed air delivered at the back of the elbow. In turning 90°, the elbow expanded from four to six inches in diameter, so that there would be little chance of clogging. Short pieces of 6-in. pipe of proper length were attached to the elbow to carry the concrete to the other end of the shaft. At the end of the short pipes, a 45° malleable elbow was attached, loose on its threads, and a short piece of 8-in. galvanized iron pipe was slipped loosely over it and the short nipple in the elbow. By turning the elbow on its threads, and using the loose fit between the 6 and 8-in. pipe for further change in angle, it was possible to deliver the concrete wherever desired.

It was planned to begin concreting in the fifth compartment, which contains the concrete column, and build out to the far end, but this was changed afterward, and work begun in the skip-compartments, in order that they might be freed more quickly for hoisting ore, which often began before the other part of the shaft was finished.

It was at first thought necessary to discharge the concrete in an open bucket below the straight pipe, as at the Old Dominion and Junction shafts, and let it overflow into a short length of pipe down to the compressed-air elbow close above the forms, for fear of clogging at the elbow and building up in the vertical pipe, but it was not needed, and eliminated a great obstacle to rapid work. The first few rounds of the trial section were poured with the bucket, but in the last, the elbow was attached to the column direct. The first elbows were cast of manganese-steel, but wore rapidly. Later, when others of plain cast-iron were used, forged patches, which lasted a long time, were bolted over the hole when formed, which was always straight under the vertical pipe. In all, six elbows were used. The column lasted well. The sections removed at the lower end were used to replace others above, that were worn out. Sixty-seven 10-ft. lengths of new pipe were required in addition to the original equipment. Much of the column is in fair condition still.

Forms. The shaft has five compartments: two for skips, two for cages, and one for air-columns, power-cables, and ladders. The skip-compartments are separated from each other and from the cage-compartments by solid walls of concrete 10-in. thick, pierced by windows for access to them and for ventilation. These are placed in every alternate 5-ft. section, and are closely planked between the adjoining cage and skip compartments, but are left open between the skip-compartments, to permit air to pass the skips on its way to the ventilating fan on the 1600-ft. level.

The forms were the most original and important factor of the operation.

It was essential that they should be self-supporting, outside of the space required for cage or skip, and it must be possible to take them down and re-set them quickly. So much time would have been required to remove and re-set the guides that it was desired to leave them in place. These requirements led through several stages to the final design shown in the photograph and drawings.

The new shaft is six inches wider than the old, to allow the forms to be set back far enough under the wall-plates to provide for the thickness of the forms and bracing.

It was necessary to use the shaft so quickly after the

Generated on 2024-09-30 01:26 GMT / https://hdl.handle.net/2027/uiug.30112007838433
Public Domain, Google-digitized / http://www.hathitrust.org/access_use#pd-google
Digitized by Google
Original from UNIVERSITY OF ILLINOIS AT URBANA-CHAMPAIGN

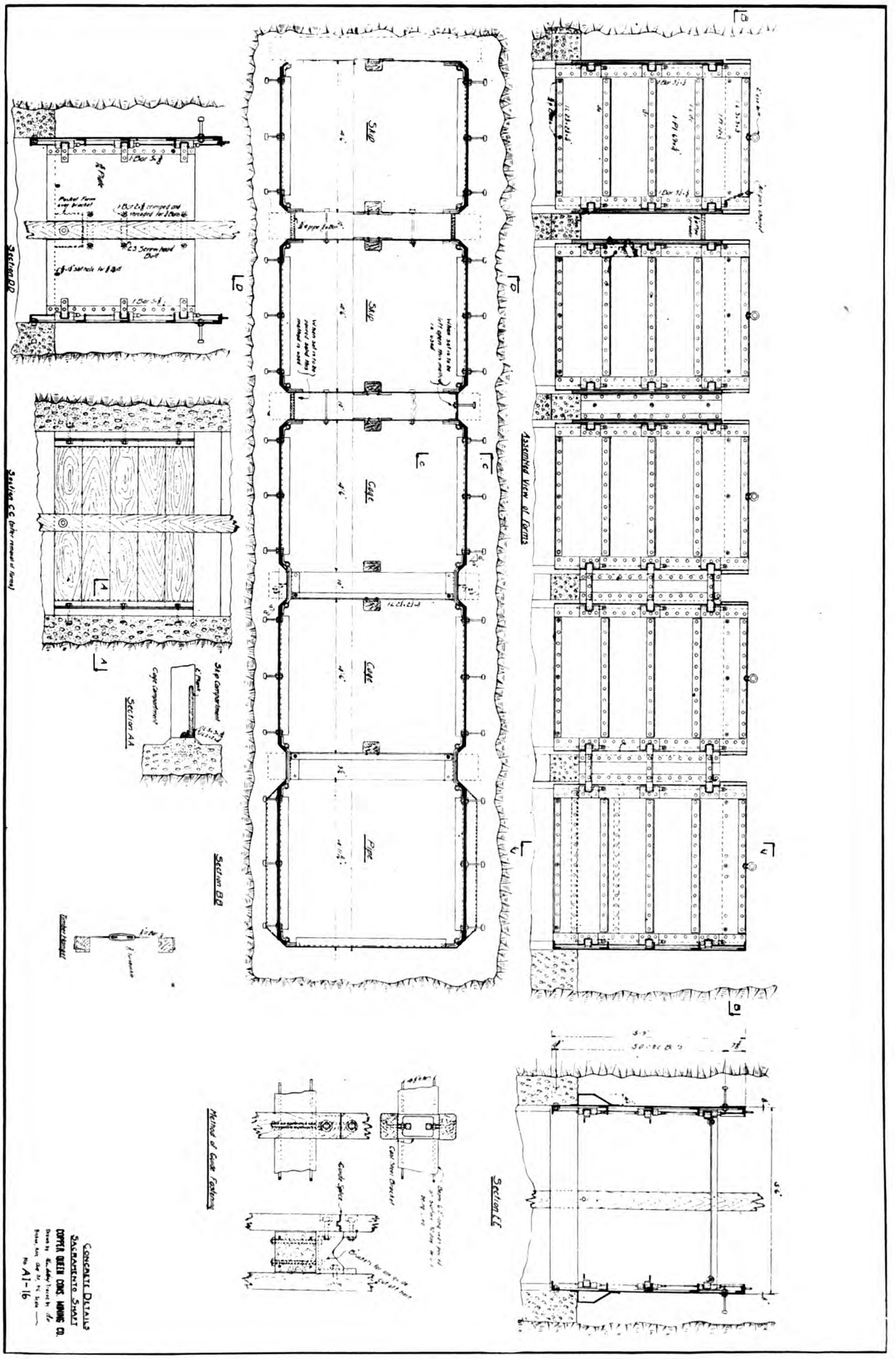

Generated on 2024-09-30 01:30 GMT / https://hdl.handle.net/2027/uiug.30112007838433
Public Domain, Google-digitized / http://www.hathitrust.org/access_use#pd-google
Digitized by Google
Original from UNIVERSITY OF ILLINOIS AT URBANA-CHAMPAIGN

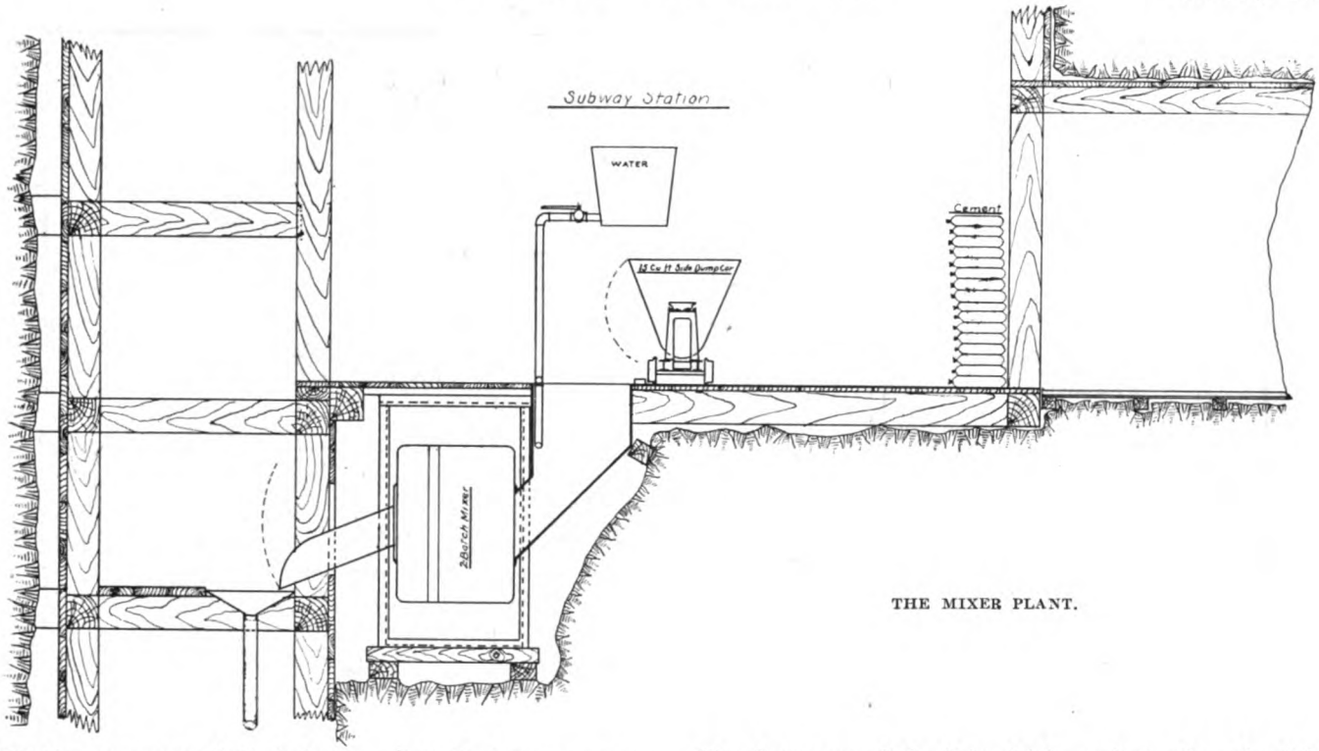

THE MIXER PLANT.

concrete was poured that it was thought best to cast reinforced concrete beams to which the guides could be attached. These were built into the partitions of the skip-compartments, but between the other compartments they stood open across the shaft, with their ends only imbedded in the concrete walls, and formed the whole support of the guides. They were held so strongly by the heavy mass of unset concrete that the jar from passing skips only settled them more firmly into place, and the initial 'set' of the concrete was not broken.

The forms in the skip-compartments are in two halves, each made of a large side-plate and two hinged wing-plates that extend to the guides. They are tied to each other by iron straps passing behind the guides, to which they are fastened by counter-sunk screws; and to prevent their shifting, nails are driven through holes in the straps into the guides after they are lined up. Forms in adjoining compartments are tied together by bolts passing through pipes cast in the partition-walls, which serve to space the wing-plates properly.

The cage-compartment forms are somewhat different. Similar side-plates are used, but there are no wing-plates, and they are braced apart by angle-irons spiked to the guides, which reach across the shaft in the 10-in. space below the reinforced concrete dividers. There are no concrete partitions, and the side-plates in adjoining compartments are connected by narrow hinged plates which block-off the concrete, but permit it to project $2\frac{1}{2}$ in. in vertical columns under the reinforced concrete dividers, as additional supports for them.

The end form is composed of three large plates attached by hinges. The side-plates have projections to core out slots in the walls, in which planks or timbers may be set to support platforms and ladders, pipes or power cables. The end-plate was built in two parts, afterward riveted together, to get it behind the pipes and cables already in the shaft.

The forms are 5 ft. 9 in. high, and overlap the 5-ft. section of concrete by 9 in. Bolts, or bent iron rods threaded, project through properly spaced holes in the forms $7\frac{5}{8}$ in. below the top, and are imbedded in the concrete when it is poured. When the forms are stripped and raised, the short ends projecting from the concrete fit into corresponding holes 5 ft. lower in the plates and $1\frac{3}{8}$ in. above the bottom. Thus, when raised, they are supported and held firmly at the bottom, where the greatest pressure from the concrete exists. The upper part is brought into alignment by attachment to the guides. They are therefore self-aligning, and require no tedious adjustment to plumb-lines swinging in the shaft.

It will be noted that all hinges are made with tapered pins that may be driven entirely out, thus disconnecting the plates, and that the hinges which are situated in the beveled corners are made so that in the skip-compartments the narrow wing-plates, in revolving, turn directly away from the face of concrete, and cannot bind. The side-plates then have ample end-clearance, and can be moved straight out also without possibility of binding.

The form in each compartment could be stripped and raised independently of the others. They were only tied together after being put in place and aligned by attachment to the guides.

The forms were made of heavy plate with accurately fitting hinges, and being very stiff, and firmly held at the bottom by the bolts cast in the walls, resist the pressure of the concrete without twisting or throwing too heavy a strain on the guides. They were made with great accuracy, all holes being drilled to template. The hinges were malleableized cast-iron, and were machined to standard by the use of jigs and templates, and the taper-hinge pins were turned in a lathe. This unusual care was taken so that parts could be replaced without special fitting.

Generated on 2024-09-30 01:23 GMT / https://hdl.handle.net/2027/uiug.30112007838433
Public Domain, Google-digitized / http://www.hathitrust.org/access_use#pd-google
Digitized by Google
Original from UNIVERSITY OF ILLINOIS AT URBANA-CHAMPAIGN

With the exception of part of one set, which stood in the shaft from March until October, no new forms were needed, and with the exception of the forms in the skip-compartments, which are more or less battered by spillage from the skips, they are still serviceable.

Chute-mouths were passed by blocking off the concrete from the sections to be left open.

At the stations, partition-walls were cast in between the cage-compartments and between the cage and pipe compartments. The edges of these walls facing the stations were formed of reinforced concrete pillars 5 in. wider than the partitions and 10 in. deep.

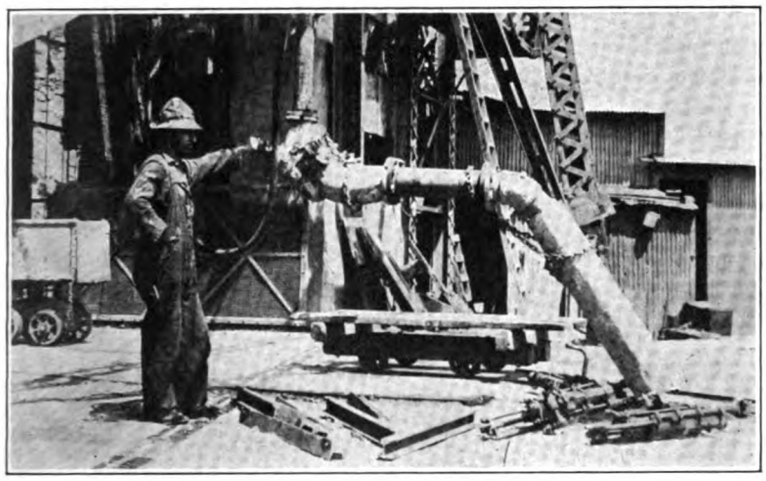

ELBOW AND DISCHARGE-PIPE.

Concrete Dividers and Guide Attachments. The reinforced cast beams for dividers were 10 by 10-in. sections and 6 ft. 2 in. long. They were cast in steel forms near the collar of the shaft. The concrete was mixed in a 4-cu. ft. power-mixer. After standing for a few days on the casting-plates, they were lifted by a small hand-derrick and stored in piles for three to four weeks, to season before use.

The guides were bolted to cast-steel brackets, which were fastened to the concrete beams by bolts passing through them, and can be replaced if damaged. Guide-bolts can also be changed easily, and there is sufficient height in the slot to allow for errors in boring guides or variations in the height of the beam. No attempt was made to have the ends of the guides meet on the brackets. Splice-plates were strapped on the back to hold temporarily until they could be permanently secured. Bent cover-plates were placed over the brackets to make pockets in the concrete, so that guide-bolts or the brackets themselves could be replaced.

Method of Work. Before concreting was begun, the guides were aligned carefully, since entire dependence was placed upon them to keep the shaft straight. Then, four to six sets of special hangers were inserted at each point of work to hold the timbers securely above the break between timbers and concrete. These were made of ⅞-in. square bars, with a turnbuckle in the middle. The ends were bent, and reaching around the wall-plates, clamped them together. This was much more rapid than if customary hangers were used.

Each cage or skip was equipped with a complete outfit of tools, etc. These consisted of two pairs of half-ton chain-blocks for each compartment, axes, saws, wrenches, tamping-bars, grease for the forms, rope-lashing, etc.

The shaft was divided into three nearly equal sections, and the starting-points were selected where the ground broke large, with a smaller section below. After hardening, the concrete would therefore wedge itself against the ground and support itself. In each case, it was necessary to make special timber-supports for the wet concrete, which made the first sections rather slow.

In beginning, each form was set with the top about two feet below the bottom of a set of timber. This was to leave only a short space of ground unprotected in the interval before the next section was poured. Owing to changes in form-setting when working past levels, this did not always remain the same, but it was found later that considerable space could be left without danger. When set as originally planned, the guides were unsupported for only a very short distance, and the attachment to the concrete beams was so close to the set above that there was no unusual strain on the guides, and little jar on the green concrete.

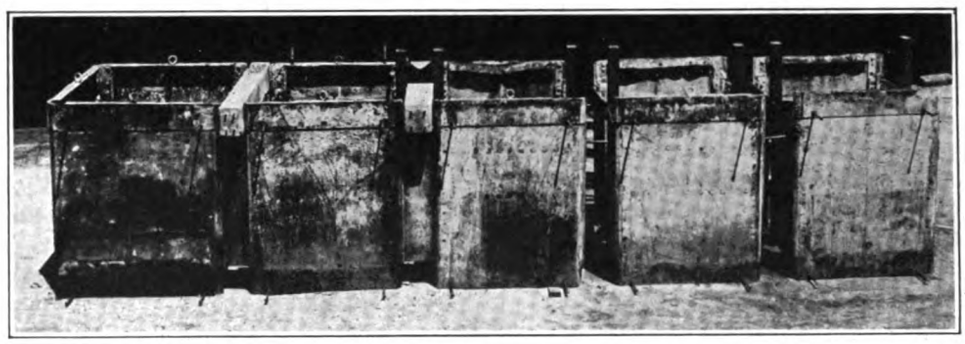

FORMS SET UP, SHOWING CONCRETE DIVIDERS AND ANCHOR-BOLTS.

The operation soon fell into a routine, which was not altered except in speed. Work began at 7:00 a.m. The skips and cages were then loaded with tools and current supplies, including a set of reinforced concrete beams. Upon reaching the point to be concreted, the hangers were taken out, the guides disconnected from the dividers, the wall-plates cut in three pieces and dropped away from the set above, after which the whole set of timbers came apart easily and was dropped into the skips or piled on the cages and lashed securely. The shaft was then cleared of loose rock and the 'muck'

Generated on 2024-09-30 01:23 GMT / https://hdl.handle.net/2027/uiug.30112007838433
Public Domain, Google-digitized / http://www.hathitrust.org/access_use#pd-google
Digitized by Google
Original from UNIVERSITY OF ILLINOIS AT URBANA-CHAMPAIGN

dropped into the skips or stored on the cages; fine material went down the shaft. In some cases, the ground was not sound, and lacing was needed to hold it temporarily in place. This was usually cast into the concrete and left. It had to be held such a short time that loose ground was easily handled, although not so rapidly.

As soon as the timbers were removed and the faces cleaned, chain-blocks were hung above and the concrete dividers slung between the guides close under the timber dividers, and lashed to them with ropes. Each set of blocks was then hung over one of the large side-plates of the forms, the slack taken up, all bolts in the forms removed and the forms themselves loosened. They were then hoisted 5 ft., slipped over the upper bolts projecting from the concrete and fastened loosely. The tie-plates behind the guides were then attached and spiked, to centre the two halves of the form. The spacing-bolts between adjoining forms were put in and the forms connected from end to end of the shaft. If there appeared to be a slight tendency to get out of square or line, they were wedged into position from a convenient point of ground, and all bolts were tightened. Other wedges were put in against the ground, and between guides and skips or cages, to take up the pressure of the fresh concrete, which might spring them out of line.

The surface of the forms against the concrete were then painted with a light grease to prevent their sticking, and they were ready for the pour.

When the forms were first put down, it was found that the bottom part of the form, which overlapped the concrete when raised to a new position, could not be put in without a great deal of trouble. A form taken away from a face of concrete cannot be replaced in its original position, and the slight irregularity between the bottom and top of the form exaggerated the difficulty. By riveting a $\frac{1}{8}$-in. plate 10 in. high around the top, a sufficient recess was cast to give plenty of clearance, and made changes rapid.

During the month of June, it took about 81 minutes to take out the timbers, and $47\frac{1}{2}$ minutes to raise the forms and connect them ready for concreting.

The elbow was then attached to the concrete column, the 6-in. pipe laid across the shaft to the skip-compartments, and concrete pouring began from that end. The first one or two batches of concrete were made richer and wetter than the rest. As the concrete rose nearly to the top of the forms, the reinforced concrete beams were dropped in place and attached to the guides by means of the brackets. This lined them up with the guides, and the concrete was then tamped around them closely and brought up flush with the top of the forms.

The average thickness of the side-walls was about 15 in. The thin section and all partition walls were reinforced, and reinforcing bars were laid across the ends of the concrete dividers to tie them into the side-walls.

As soon as the skip-compartments were finished, the opening between the skip and cage compartments was planked up temporarily, and if it was a set having a window, the permanent planks were put in also. The hangers removed from the set taken out were inserted

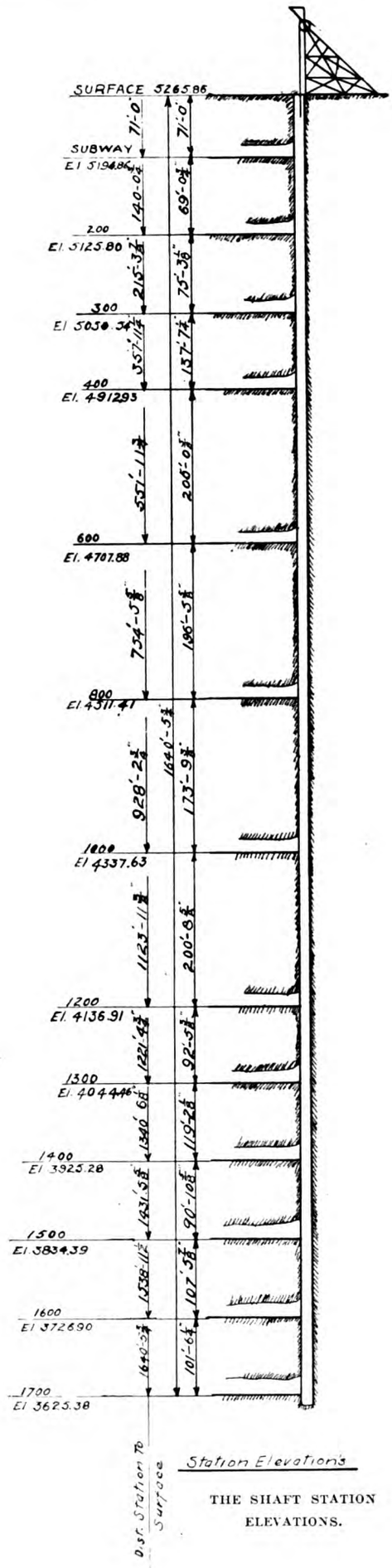

Generated on 2024-09-30 01:27 GMT / https://hdl.handle.net/2027/uiug.30112007838433
Public Domain, Google-digitized / http://www.hathitrust.org/access_use#pd-google
Digitized by Google
Original from UNIVERSITY OF ILLINOIS AT URBANA-CHAMPAIGN

above and the skip-compartments were ready for hoisting ore. The other compartments were finished later, and the pipe connected for the next section.

A convenient time was used for going to the top for 'lunch,' after the forms were set, for instance, or in some cases, after the round was finished. The timbers were then taken from the cages and skips. When coming up after finishing a round, the boxes containing bolts, tools, etc., were at once overhauled to see that the equipment was complete for the next section.

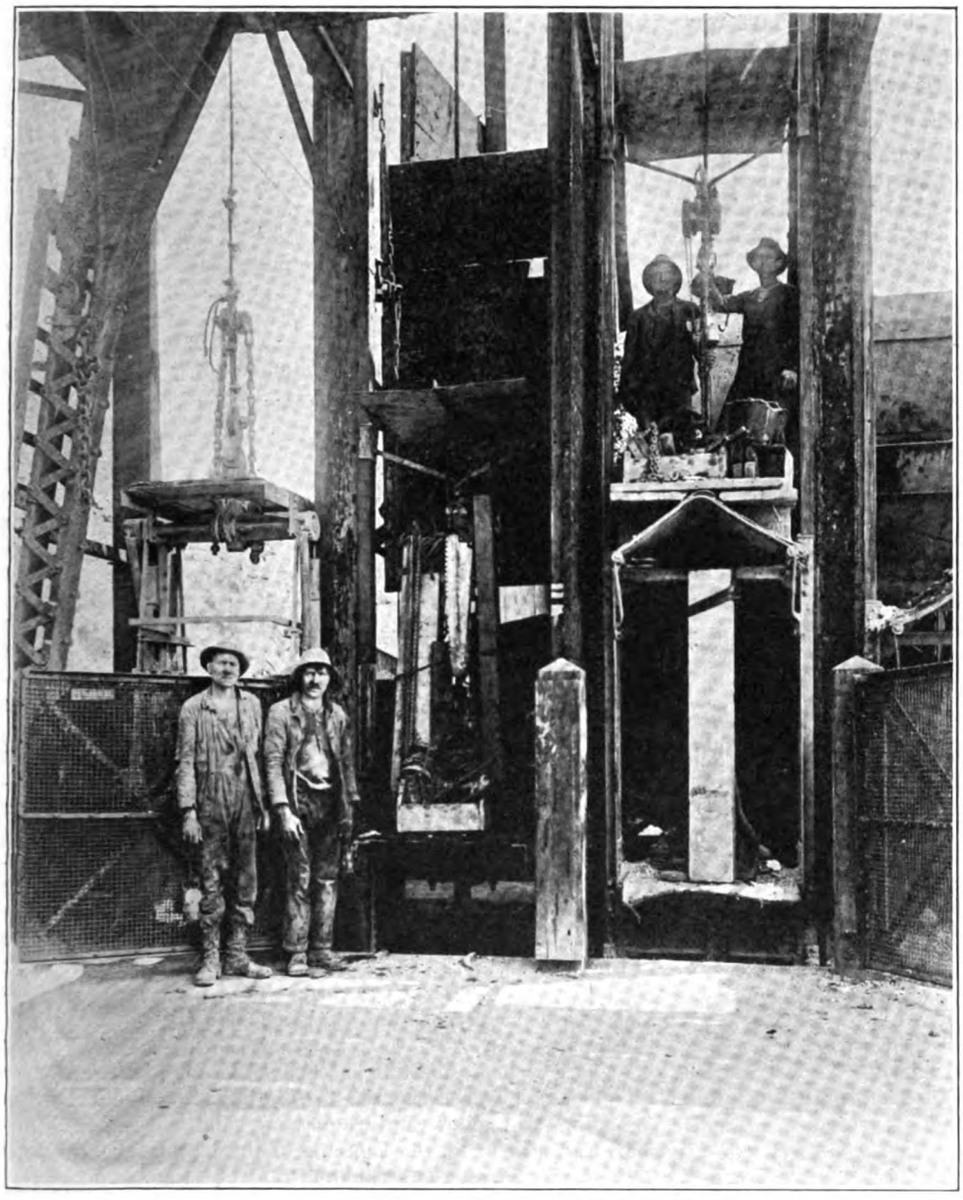

CAGES EQUIPPED FOR WORK. THE PUMP ATTACHED TO THE CABLE.

The 70-ft. section above the adit-level was concreted by discharging the concrete into a car on the nearest cage, and hoisting it to the collar. From there, it was spouted down to the forms.

It was at first expected that the concrete would stand about 64 hours before the forms were stripped, but when greater speed was made, a number of forms were stripped in less time, and during the latter part of the time, a few forms stood only about 20 hours after pouring. The mixture was rather rich, however, and the concrete was not injured.

The men employed in the shaft were 12 in number; 2 in each compartment, one pipe-man and one foreman. Since every set was, in its essentials, like every other, and each pair worked in the same compartment continually, they became extremely expert in the work, and in cooperating to make progress. Some work a little out of the routine had to be done in changing concrete-pipe, compressed-air connections, or the pipes and cables in the shaft. This was done whenever convenient, ordinarily during the latter part of the shift. An electrician was usually in attendance.

Concrete Mixing. The mixing, which includes bringing the cement and aggregate from storage to mixer, occupied a crew of eight men. One man measured rock and sand into the hoppers; four men trammed it to the mixer; one man assisted in dumping the cars and measured the cement into the hopper; another tripped the materials into the mixer and measured the water, and a foreman fed the mixed concrete into the hopper and 4-in. pipe. This required considerable care. Mixing began when a red signal lamp was lighted from below, and stopped when it was turned off. After the section was poured, the concrete mixer and pipe were washed out with water, so that they might be clear for the next day. When not mixing concrete, the men cast reinforced dividers, removed timbers, and cut it to lengths for use underground. Others unloaded cars of sand or rock and elevated it to the bins, trammed cement to the mixing station, or assisted in operating the ore-conveyors.

Progress. It was originally estimated that the maximum time for putting in a section would be ten hours. This time dropped at once to eight, and as the men became more accustomed to the work, it was still further reduced, until it became a question of how to use the rest of the shift to advantage. Additional production was desired, and hoisting usually began as soon as the skip-compartments were free. The men from the skip-compartments loaded the skips, operated the belt-con-

Generated on 2024-09-30 01:23 GMT / https://hdl.handle.net/2027/uiug.30112007838433
Public Domain, Google-digitized / http://www.hathitrust.org/access_use#pd-google
Digitized by Google
Original from UNIVERSITY OF ILLINOIS AT URBANA-CHAMPAIGN

veyors, etc. The time occupied in doing effective work outside the shaft was charged to that work and not to the shaft. Those men not occupied in loading skips or operating the conveyor-plant, made what preparations were possible for the next round. Before long, the time was shortened so much that it was possible occasionally to concrete two sections in eight hours. This first occurred on November 14. Later, two sections in eight hours was frequent, and in June, 260 ft. of shaft was lined in 30 days, and 64,545 tons of ore hoisted in the same time. On July 3, three rounds were put in.

PROGRESS TABLE

1915	Days worked	Number of feet	Dry tonnage hoisted
October	11	55	27,844
November	22	135	63,491
December	12	90	74,313
1916			
January	19	110	67,000
February	29	150	66,166
March	31	165	75,190
April	30	200	63,820
May	30	250	69,247
June	30	260	64,545
July	27	205	62,722

An accurate log was kept of all shaft-work beginning on November 6, 1915, and covering 1540 ft. of shaft. During this period, the average time required to complete a cycle of operations in putting in a 5-ft. section was 6 hours 14 minutes. In June 1916, it only took 4 hours 31 minutes for the average set.

	November 6 to July 30, minutes	June, minutes
Loading tools and cleaning shaft	30	19.2
Removing timbers	98	80.9
Raising and setting forms	84	47.4
Connecting concrete pipe	28	27.3
Mixing and pouring concrete	78	60.0
Unloading cages and cleaning tools	17	14.8
Miscellaneous delays	9	3.4
Lunch	30	17.3
	374	270.8

COST OF CONCRETING SACRAMENTO SHAFT

		Total cost	Cost per foot of shaft
Miscellaneous preparatory expense:			
Making platforms, etc., for cages and skips	$ 252.79		
Changing power-cables, electric lights, etc.	293.00		
Supply-house at shaft	120.05		
Miscellaneous	527.68		
		$1,193.52	$0.72554
Aligning guides		557.55	0.33893
Routine labor in shaft:			
Removing timbers	$5,063.08		
Raising and setting forms	4,998.21		
Pouring concrete ($0.686 per yd.)	4,303.65		
Repairing and changing concrete columns and other pipe-work	2,318.22		
Protection and changing of power-cables	1,655.43		
		18,338.59	11.1481
Concrete		42,796.47	26.016
Concrete dividers		3,663.32	2.227
Miscellaneous supplies:			
Reinforcing bars	$1,150.25		
Guide-brackets and covers	3,024.77		
Bolts	718.02		
Angles for partition-walls	461.91		
Distance-plates	482.24		
Miscellaneous	3,512.57		
		$9,349.76	$5.684
New guides, ladders, etc.:			
Labor	$1,527.91		
Timber	675.90		
		2,203.81	1.339
Hoisting engineers		1,861.15	1.131
Supervision		3,372.10	2.050
Accident compensation		88.53	0.053
Total		$83,424.80	$50.712
Credit for timber delivered to mine department		2,801.62	1.703
Net cost		$80,623.18	$49.009
Cost of opening quarry and equipment of crushing plant		5,666.18	

CONCRETE

Rock and sand	Yards of material	Yards of concrete in place	Cost per yard of material	Cost per yard of concrete in place
Quarrying and crushing	7,800	6,195	$0.8978	$1.1304
Transportation and elevation at storage-bins	7,800	6,195	0.1729	0.2177
Cost of storage-bins	7,800	6,195	0.2713	0.3416
	7,800	6,195	$1.3420	$1.6898
Sand and rock bought for experimental section	93	75	1.641	2.035
	7,893	6,270	$1.346	$1.6939
Cement			21,559.98	3.4386
				$5.1325
Mixing			3,363.69	0.5594
Concrete column, elbows, air-lines, etc.			2,435.79	0.3885
Forms			4,672.66	0.7452
Cost per yard of concrete delivered at forms*				$6.8256

*There was no absolute method of measuring the concrete in place. It was estimated by casting several batches composed of the regular mixture of rock, sand and cement, into a box, and measuring the contents of the mass after it was set. The mixer-charge was estimated to make 11 cu. ft. of concrete in place.

REINFORCED CONCRETE DIVIDERS

	Total cost	Per cu. yd. concrete
Labor of mixing	$1,168.54	$5.02
Rock and sand	393.73	1.69
Cement	962.82	4.13
Reinforcing	727.13	3.12
Pipes for bolt holes	185.55	0.80
Forms	90.00	0.39
Miscellaneous supplies	135.55	0.58
	$3,663.32	$15.72

The costs include all items chargeable to this work. As the cages and skips made only two trips per round, no charge was made for power.

Generated on 2024-09-30 01:24 GMT / https://hdl.handle.net/2027/uiug.30112007838433
Public Domain, Google-digitized / http://www.hathitrust.org/access_use#pd-google
Digitized by Google
Original from UNIVERSITY OF ILLINOIS AT URBANA-CHAMPAIGN

Economic and Other Benefits Resulting From Highway Improvements

Bulletin No. 393 of the U. S. Department of Agriculture contains a summary of an investigation made by the U. S. Office of Public Roads and Rural Engineering regarding the results of highway improvement in eight counties, namely, Spotsylvania, Dinwiddie, Lee, and Wise counties, Virginia; Franklin county, New York; Dallas county, Alabama; Lauderdale county, Mississippi; and Manatee county, Florida. Table I shows the amount and character of the bonds issued, and the taxation rates. The bulletin states that most counties will find it most convenient to issue deferred serial bonds, the first maturing six, and the last up to thirty years after the date of issue. In this way the taxpayers get their highway system completed and commence to derive benefits from it before they are called upon to redeem any of the bonds. The rate of redemption should be such that the burden is not too great in any one year, but should be rapid enough to keep the total expense for interest and principal at a reasonable amount. It is shown that several of the counties would have saved a considerable amount had they adopted this plan for redemption.

TABLE I. BONDS ISSUED FOR ROADS AND TAXATION RATES.

State and county.	Bonded debt incurred for roads.			Term of bonds in years.	Interest rate on bonds.	Average rate of tax per $100 of assessed valuation.			
						All purposes.		Road bonds.	
	Total to 1915, inclusive.	Per capita.	Per $100 assessed valuation. (1915)			1910	1915	1910	1915
Virginia:					*Per ct.*				
Spotsylvania	[1] $173,000	$10.93	$4.97	[2] 5-30	4½-5	$1.20	$1.70	[3] $0.45	$0.625
Dinwiddie	105,000	2.66	1.75	[4] 20-30	5-6	1.20	1.20	0	.10
Lee	455,000	19.08	9.15	[5] 5-26	5½	1.40	1.96	0	.61
Wise	960,000	28.10	7.04	[4] 20-30	5	1.40	1.762	0.30	.562
New York: Franklin	500,000	10.92	3.66	[5] 10-50	4½-5	(6)	(6)	(6)	(6)
Alabama: Dallas	350,000	6.57	2.48	[7] 30	5	1.35	1.40	0	[8] .176
Mississippi: Lauderdale	500.000	10.65	3.08	[5] 10-25	5-5½	1.54	1.66	0	.16
Florida: Manatee	250,000	26.17	3.09	[7] 30	5	2.65	2.60	.70	.30

[1] Amount authorized but only $140,000 sold.
[2] Callable after 5 years.
[3] Average for two districts only.
[4] Deferred serial with sinking-fund provision.
[5] Deferred serial.
[6] Taxes levied by towns and vary in each.
[7] Sinking fund.
[8] No special levy made for road bonds, but an average rate of 17.6 cents on the $100 will pay interest and create sinking fund with which to retire bonds in 30 years.

Tables II and III show the total mileage of road in each county, the amount improved, and the character of the improvement. The best maintenance system was found in Lauderdale county, where the law specifies that an amount not less than one mill per dollar shall be levied to provide a maintenance fund for all the highways constructed under bond issues, and that this fund shall be kept separate from all other county funds and shall be used for that purpose. As a result the highways in that county are actually in better condition at the present time than when they were constructed.

TABLE II. TOTAL LENGTH OF ROADS AND IMPROVED MILEAGE.

State and county	Total of all roads.	Miles of road per square mile of area.	Surfaced.		Graded under bond issue.	Total graded or surfaced.
			Under bond issue.	Total.		
Virginia:			*Miles.*	*Miles.*	*Miles.*	*Miles.*
Spotsylvania	400	0.97	[1] 76.73	82.73	0	82.73
Dinwiddie	524	1.01	[2] 91.3	101.06	0	101.06
Lee	450	1.00	[1] 39.26	44.86	[1] 60.19	105.05
Wise	300	71	78.47	83.07	62.75	145.82
New York: Franklin	1,370	.82	124.0	386.8	0	368.8
Alabama: Dallas	1,000	1.04	101.75	217.9	0	217.9
Mississippi: Lauderdale	800	1.16	96.75	146.75	0	146.75
Florida: Manatee	575	43	57.25	57.25	6.4	63.65

[1] Built partly with State convicts. [2] Built entirely with State convicts.

TABLE III. CHARACTER OF IMPROVEMENT AND COST PER MILE.

State and county.	Road mileage (per cent of grand total).			Character of surface.	Cost per mile.
	Surfaced only.	Graded only.	Graded or surfaced.		
Virginia:					
Spotsylvania	20.6	0	20.6	Sand-clay	[1] $1,150-$1,500
				Gravel	[1] 2,000- 2,500
Dinwiddie	19.3	0	19.3	Gravel, sand-clay, top-soil	1,300- 1,700
Lee	10.0	13.3	23.3	Earth	[1] 3,000- 3,500
				Macadam	[1] 6,000- 7,000
Wise	27.7	20.9	48.6	Earth	5,700
				Macadam	9,200
				Bituminous surface treatment.	400
New York: Franklin	28.2	0	28.2	Gravel	1,900- 2,500
				Macadam	3,000- 4,000
Alabama: Dallas	21.7	0	21.7	Gravel	3,000- 3,600
				Sand-clay	1,500- 1,800
Mississippi: Lauderdale	18.3	0	18.3	Gravel-macadam	4,000- 6,500
				Sand-clay	1,700- 2,000
Florida: Manatee	9.9	1.1	11.0	Marl-rock macadam	3,800
				Flint-rock macadam	4,700
				Shells	2,400

Table IV shows the approximate saving in hauling costs as a result of the highway improvement. The tonnage in each case was estimated from a traffic census, statistics of railway shipments, etc. It will be noted that, except in Wise county, the highway improvements seem to have paid for themselves in saving hauling cost alone. The system in that county was planned originally without sufficient engineering advice, and apparently was somewhat more expensive than was warranted. Nevertheless, it was

Generated on 2024-09-30 01:23 GMT / https://hdl.handle.net/2027/uiug.30112007838433
Public Domain, Google-digitized / http://www.hathitrust.org/access_use#pd-google
Digitized by Google
Original from UNIVERSITY OF ILLINOIS AT URBANA-CHAMPAIGN

found that the residents were satisfied, largely because the highway system results in a number of other benefits besides reduction in hauling costs. These benefits, which were observed in all the counties under discussion, included the increased school attendance and the general social benefits resulting from improved means of communication. Before the highway improvements were commenced in the eight counties, it was found that the average school attendance per 100 enrolled was 66, whereas, after the improvements were completed, the average was 76.

The benefits resulting from the highway improvement were reflected in each county by an increase in the selling price of the land served by the improved highways amounting to from one to three times the total cost of the improvements. In some of the counties this was recognized by an established practice in the assessor's offices of rating the value of each piece of land according to its distance from an improved road.

TABLE IV. SAVING IN HAULING COST RESULTING FROM HIGHWAY IMPROVEMENT.

[Averages are weighted.]

Selected counties.	Bonds issued.	Value of State-aid contributions in convict labor.	Estimated annual outlay for interest and retirement of principal.[1]	Annual ton-miles of traffic.	Annual cost of principal and interest and convict-labor aid per ton-mile of traffic.	Hauling cost per ton-mile.		Gross saving per ton-mile.	Saving per ton-mile after deducting cost of interest and principal.[1]
						Before improvement.	After improvement.		
Spotsylvania, Va..	[2]$140,000	$11,856.41	$10,533.00	921,521	$0.0114	$0.300	$0.137	$0.163	$0.149
Dinwiddie, Va.....	105,000	37,038.32	10,573.65	833,136	.0126	.300	.150	.150	.137
Lee, Va.....	455,000	21,175.48	27,967.34	297,180	.0941	.400	.200	.200	.106
Wise, Va.....	960,000	.....	74,330.00	200,000	.3716	.570	.230	.340	−.032
Franklin, N. Y....	500,000	.....	21,730.00	242,145	.0897	.303	.096	.207	117
Dallas, Ala.....	350,000	.....	24,856.76	610,000	.0407	.300	.150	.150	.109
Lauderdale, Miss..	500,000	.....	33,466.66	255,378	.1310	.370	.200	.170	.039
Manatee, Fla.....	250,000	.....	16,262.85	130,292	.1247	.450	.200	.250	.125
Total and average.....	3,260,000	70,070.21	219,720.26	3,489,652	.0629	.335	157	.179	.116

[1] Plus interest at 5 per cent on value of State-aid contributions of convict labor.
[2] Exclusive of $33,000 voted but not yet issued for Livingston and Berkley districts.

It is significant that no account is taken in this report of increased or decreased cost of maintenance resulting from highway improvement. This is presumably due to the fact that the types of road surface selected were such as to require a considerable outlay for maintenance, whereas before the improvement was made little or no effort was made to maintain such roads as existed at that time, so that the cost of maintenance was, if anything, increased somewhat. In California, on the other hand, where a concrete base with some asphaltic surface has practically become the standard for heavy-traffic roads, it is found that the saving in maintenance resulting from the improvement will frequently go a long way toward paying the interest and sinking-fund of the bonds.

A novel method for testing detonators is used in New Zealand. The detonator is crimped on a short fuse and hung so that the detonator touches the centre of a lead plate. Upon firing by the fuse, a small crater is cut in the plate, with scratches radiating from the crater as a centre.

CONSTRUCTION OF THE VENTURA COUNTY HIGHWAY SYSTEM*

Ventura county is now at work on a system of improved highways to cost $1,000,000. When this system is complete there will be 100 miles of hard surfaced roads, constructed by the county, in addition to 40 miles of the California State Highway.

The funds for the construction of this system of highways became available on December 20, 1915. Surveys were started immediately and completed in three months at a cost of $50 per mile. After considering all types of pavement the Highway Commission decided to construct 70 miles of cement concrete, and more if the funds were sufficient.

Bids were received for furnishing 75,000 barrels of cement and the low price of $1.33 per barrel, f.o.b. Colton, was obtained. Bids were also requested for furnishing 100,000 tons of sand and gravel, with an option for 150,000 tons additional. A price of $0.385 per ton for gravel and $0.14 per ton for sand was obtained. The source of supply is the bed of the Santa Clara river near Saticoy.

A special freight rate was also obtained from the railroad company on cement, sand, and gravel. The total saving through purchasing in large quantities and obtaining special freight rates will be over $50,000.

Contract work on the roads was begun in May. The sand and gravel plant is able to supply three contractors at the same time, each laying ½ mile of completed pavement per week. Up to the present time 20 miles of pavement has been laid and contracts have been let for a total of 37 miles. Wherever the earth work was large enough to justify it, contracts have been let for grading. Contracts have also been awarded for three bridges, costing $70,000. The specifications for the concrete pavement call for a thickness of 4 in. and a width of 16 ft. A 1 : 2½ : 5 mixture is used.

The County Highway Commission is composed of A. C. Hardison, H. H. Eastwood, and Wm. McGuire. The chief engineer in charge of the work is C. W. Petit.

Chloride of lime for disinfection of swimming-pools where it is not convenient to change the water frequently is discussed in *The Philippine Journal of Science* by G. W. Heise and R. H. Aguilar. It was found with the swimming-pools at Manila that the addition of 0.5 part of available chlorine per million parts of water daily would keep the water in a bacteriologically satisfactory condition.

*From data furnished by C. W. Petit, chief engineer Ventura County Highway Commission, Ventura, California.

Generated on 2024-09-30 01:25 GMT / https://hdl.handle.net/2027/uiug.30112007838433
Public Domain, Google-digitized / http://www.hathitrust.org/access_use#pd-google
Digitized by Google
Original from UNIVERSITY OF ILLINOIS AT URBANA-CHAMPAIGN

Design and Operation of Motor Trucks*

At first the design of the motor truck followed closely that of the pleasure-car. This was a natural sequence for a business growing up as a branch of pleasure-car manufacturing. The same type of engine was used for both and the same drive through a differential on a live rear-axle, such as is still in use for trucks of the light-delivery type. For the heavier trucks the frame of the car was lengthened, and the differential and rear-axle gave way to a differential and jackshaft attached to the frame. The jackshaft carried sprockets, and the final drive was made by a chain to the rear wheels, which were carried on a dead axle. This arrangement had three obvious advantages: first, it kept the engine-drive as small and light as possible, since the final reduction in rotations was made at the rear wheels; second, it was accessible, and the gear-ratio could be changed at will by putting a different-size sprocket on the jackshaft; lastly, it segregated the power-plant so that the truck might be considered as composed of two separate units. The first of these units, the wheels, axles and steering-gear, was expected to take the jar and distortion of running, while the other unit, the truck-frame and power-plant, floated above the first one on the springs, the chain furnishing the power connection between the two units. Automobile engineers state that each pound of 'unsprung' weight is as hard on the tires, and therefore on the truck, as four pounds would be if placed above the springs, where the effects of the weight are cushioned. The chain-drive kept the weight of the parts a minimum, and also kept it above the springs.

It was soon discovered that it was not possible to absorb all of the vibration and twisting which hard service gives to a truck without transmitting a considerable part to the frame and power-plant. To the jar from the road was also added the twistings set up in the frame because of eccentric loading. These effects were all transmitted to the power-plant, to the radiator, and to all parts which were attached rigidly to the frame. There were two possible ways of dealing with this difficulty; first, a more rigid frame and a better cushioning through the tires and springs; or, second, a flexible frame to which the various power-plant units would be flexibly mounted, so that each unit, while in itself a compact, rigid, perfectly aligned machine, would not suffer distortion by twisting set up in the frame. These units would be connected by shafts having universal joints or some other flexible connection. The modern truck has been developed along both of these lines. For the lighter and faster-running delivery truck the pneumatic tire is largely used, and its use is being extended to heavier trucks. Double pneumatic tires for the rear wheels are used sometimes, and single tires are being made up to 12 in. tread diameter. Both pneumatic and solid tires have been made as elastic as possible without too great a sacrifice of other desirable qualities. Truck springs have been greatly improved also. The older types of truck springs were made up of rather thick leaves. They were short and narrow and had considerable camber. With the advent of modern heat-treated steel a much better design of spring with thinner leaves has been developed. It is longer, flatter, and better suited to the needs of the truck. Such springs are made of high-grade carbon or alloy steel, with the leaves self-lubricated and the spring-eyes provided with phosphor-bronze bushings. The pins are nickel steel and the clips are chrome-nickel or vanadium steel. The old-fashioned full-elliptical type has given place to the semi-elliptical as the preferred type. This improvement in the design and quality of springs and tires has reduced considerably the strains in the frame.

In the smaller trucks, up to about two tons capacity, it is possible to combine the engine, the flywheel and its clutch, and the transmission in one rigid assembly. This gives perfect alignment. This unit power-plant is then flexibly mounted within the main frame, usually with three points of support, two attached rigidly to the main frame and the third swiveled from a bearing on a main-frame cross-member. Another method is to mount the power-plant rigidly to a sub-frame, which, in turn, is flexibly mounted within the main frame. This mounting may be a three-point support or one of four points, with spring-buffers to absorb the jar and twist. Where the transmission is separate from the engine it is also flexibly mounted to the frame. The differential and jackshaft-unit is treated the same way.

Motor-Truck Engines. Motor-truck engines do not differ greatly from those on pleasure-cars. Motor-truck service is more severe and the engines are kept at capacity for longer times. For this reason the engines are run at slower speeds, from 800 to 1200 r.p.m. for trucks of one ton capacity or heavier, and the engines are therefore larger for the same horse-power. In general, truck-engines are usually built stockier, with heavier crankshafts and connecting rods and larger bearings throughout. The water-jacket space is somewhat larger and the cylinder-walls thicker, which permits more re-boring. The radiator is larger than for the same size of pleasure-car engine. The valves, carburetor, and intake-manifold are often made smaller than on a pleasure car. This is possible with the slower speed, and has the advantage of preventing the driver

*Abstract of paper presented at a meeting of the Los Angeles Section of the American Society of Mechanical Engineers, by W. H. Clapp.

Generated on 2024-09-30 01:32 GMT / https://hdl.handle.net/2027/uiug.30112007838433
Public Domain, Google-digitized / http://www.hathitrust.org/access_use#pd-google
Digitized by Google
Original from UNIVERSITY OF ILLINOIS AT URBANA-CHAMPAIGN

from over-speeding the engine when it is not under governor control. Governors are now coming into general use, however, on trucks of one ton capacity or heavier. The governor throttles the gas mixture between the carburetor and the intake-manifold. It may be driven from any exposed rotating part of the engine, or from the transmission, or from the wheel of the truck itself. The four-cylinder, four-stroke-cycle engine is now standard for truck construction and is used on 95% of the trucks manufactured. There are a few makes of two-cylinder engines with the cylinders opposed to each other. One or two builders have recently brought out six-cylinder engines, but their use for most work would not seem to be warranted at the present price of motor fuel. The four-stroke cycle is made necessary by the varying load which every truck engine must handle.

Cylinders are cast separate, in pairs, or *en bloc*. The preference seems to be for cylinders in pairs with either three or five crankshaft bearings for trucks of moderate to large size, and cylinders *en bloc* with three bearings for the smaller sizes. Individual cylinders are used on many of the larger trucks. As to the placing of valves in the cylinder, the same types obtain as on pleasure-cars. There is a preference for the 'L-head' type for the smaller engines up to about four inches in diameter, as ample valves may be used and still provide for the necessary water-cooling space around them. Nearly 80% of all engines are of this type. With increase of cylinder diameter, cooling is more difficult, and many makers prefer the 'T-head' construction with valves on opposite sides of the cylinder. There are a few motors with the valves in the head, and some with one set of valves in the head and the other in the side. The bore-stroke ratio varies from 1:1.1 up to 1:1.5. Average sizes vary from $3\frac{1}{2}$ by $4\frac{3}{4}$ in. for a 1-ton truck up to 5 by 6 in. for a $7\frac{1}{2}$-ton machine.

The clutch is usually housed with the fly-wheel. The cone-clutch with leather against metal and the cone a part of the fly-wheel itself has been the favorite until recently. The more complex multiple-disk clutches with steel against steel or against bronze plates running in an oil bath, or steel against a built-up fabric of brass wire and asbestos running either in oil or running dry are also largely used. The dry type has been gaining in favor. It is accessible and there is abundant surface to take care of starting-friction.

Transmission System. There are a few friction-type or planetary-type transmissions on some of the lighter trucks, but the selective type with sliding gears, three speeds forward and a reverse, is generally used. It has not been entirely successful for heavy truck duty. The operation of a transmission requires a certain amount of skill and respect for machinery not always found in an unskilled employee. There has been a marked tendency to adopt some form of individual clutch system for the heavier trucks. Also a fourth speed forward on these trucks is coming into use to meet the requirements of tractor duty and of starting under heavy load.

There are two methods of water cooling used on light-truck engines, one the thermo-syphon, for which the claim is made that it is simple and effective, while opposed to the cheaper and simpler method is that of pump circulation, which tends to keep the engine cylinder more nearly uniform in temperature under all running conditions. Other examples of different design for truck parts are the frame members, which may be built-up shapes of channels or I-beams, or pressed-steel frames, which are lighter and more flexible, made of a higher grade of heat-treated steel, more expensive, but coming into increased favor with truck manufacturers. Again, the truck wheels may be of the wooden artillery-type, of cast-steel, or of built-up pressed-steel construction. For bearings, flexible rollers and balls compete with the truncated cone-roller. Brakes are either shoe or band, each of which may be either internally expanding or externally contracting. They may be placed both on the rear wheels, or one set, usually the service brakes, on the jackshaft on chain-drive machines or on the main shaft back of the transmission on the other types of drives. Again, there are four types of radiator construction, twenty standard types of carburetor, and nearly as many ignition systems. Lubrication may be by splash, by forced feed, or a combination of both, and so with nearly every feature of truck construction.

Types of Final Drive. For light-running trucks the pleasure-car type of drive with the differential on the rear axle is customary. Its use is restricted to cars of 1500-lb. capacity or less, as a greater gear-reduction than about five to one gives such a large differential assembly that there is not enough road clearance. An additional speed-reduction of some kind must be made for the heavier trucks. The many advantages of the chain drive have not been sufficient to overcome the objectionable features of exposed grit-collecting parts and broken chains. Three separate types have been developed to meet these objections.

The first of these types, the double-reduction axle, uses one pair of bevel-gears and one pair of spur-gears trained together and housed with the differential on the rear axle. There is the advantage of enclosure of all working parts, quiet operation and no thrust loads on the differential. The assembly is heavy and there are a good many parts. Its use is now restricted to a few makes of light trucks of $1\frac{1}{2}$ tons capacity or less.

The internal-gear drive is also a double-reduction drive, as two sets of gears are used. It is also like the chain drive, in that a dead axle carries the load while the differential is on a jackshaft, but in this drive the jackshaft is carried alongside of and parallel to the rear axle, while the chain connection gives way to a spur-pinion running inside an annular gear on the rear wheels. It is quiet in operation and the parts are all enclosed. It has the advantage of a dead axle to carry the load, an argument that appeals to many customers;

Generated on 2024-09-30 01:30 GMT / https://hdl.handle.net/2027/uiug.30112007838433
Public Domain, Google-digitized / http://www.hathitrust.org/access_use#pd-google
Digitized by Google
Original from UNIVERSITY OF ILLINOIS AT URBANA-CHAMPAIGN

also the differential is smaller than that on the double-reduction drive, as it runs faster. There is, however, a thrust on the differential from the driving shaft. The weight-carrying axle is usually of I-beam construction, and the jackshaft may lie either in front of or back of this axle. This drive was first developed in Europe, and has been used increasingly in this country, principally for trucks of from 1½ to 3 tons capacity.

The worm-gear drive, while it has met with much opposition, is the simplest and possibly the most satisfactory of the three types. It has fewer parts, since the differential is carried within the worm-wheel and the entire reduction is made in one step. There is a live rear axle which transmits the power to the rear wheels. This is usually of the full floating type, with the truck weight carried on the outside of the axle casing. The live axle must be large, as must also be the differential, since there is no reduction in rotations at the wheel. There is a heavy pressure between the worm and wheel, as the wheel is of small diameter. It is necessary to maintain exact alignment between the worm and wheel. This requires a heavy built-up housing to carry the assembly. This housing is of cast construction. All of this weight comes on the tires with no spring intervening. In spite of these objections, the worm drive is now being used on all sizes of trucks from ½ up to 6 tons capacity. The success of the worm drive depends upon exact proportions, perfect alignment at all times, and, most important of all, the maintenance of an oil film which will not be squeezed out by the thrust of the worm-shaft.

There are a variety of four-wheel drives on the market in which various combinations of internal gears or live axles are used to propel the truck through all four wheels. As the front wheels must swivel, and in some cases the rear wheels also are used in steering, it is necessary to provide for this in the drive either by knuckle-joints or through a bevel-gear train with one gear mounted on the swiveling axis. These trucks are much used where the road conditions are severe, as for ore-hauling work in mountainous country or out on the desert, and for army-transport work.

What has been said of the methods of driving gasoline-trucks applies also to battery-driven electric trucks. These trucks, because of their simplicity and durability, and because of a high starting-torque compared with the gasoline truck, are much used for work within their special fields. They are specially suited for delivery service in congested districts and where the number of stops per mile is large, and for special service such as street-work hauling with heavy loads and many stops, drawing conduit wires, raising telephone poles, and wholesale delivery. Their use within these fields would be increased if the first cost were not so high. It is considerably more for the lighter types of truck. Electric trucks are handicapped by a slower speed, about 60% of that of a gasoline truck, and the mileage is limited to between 35 and 45 miles per day as compared with 75 miles or more for the latter. Also, the electric truck must be brought to a point where direct current is available for charging the batteries. For work for which they are suited, the electric trucks will usually show a lower daily cost than gasoline trucks, where the latter are held down to the same number of miles a day. It frequently happens that it is not possible to get a greater mileage with the gasoline truck because of frequent stops and congested streets. The electric truck, with fewer parts, and none of these reciprocating, gives a lower maintenance cost outside of batteries, and the depreciation has been less than on the older types of gasoline trucks.

There is another type of truck which combines both the gasoline-engine and the electric-motor drive. The engine runs at a constant speed at all times, and is direct-connected to a generator which drives motors placed within the four built-up steel wheels of the truck. Each motor is carried by a steering knuckle, and the armature has a pinion at one end which engages with a ring gear on one side of the wheel, while a pinion on the opposite end of the armature engages with another gear on the opposite face of the wheel. This arrangement, while undoubtedly less efficient than the direct-connected drive, has all of the simplicity of the electric truck, for it eliminates all chains, sprockets, clutches, sliding gears and differential. The mileage is unlimited, and it promises to meet the requirements of heavy duty and long-drawn-out service.

For every truck it is necessary to provide some means of resisting the rear-axle torque, which reacts on the driving gear and axle casing. The reduction gear on the rear axle tends to rotate instead of turning the wheel, and carries the axle casing with it. This turning must be prevented by some member connecting the casing with the main frame of the truck. Again, the thrust of the wheels against the roadbed must be made to react on the frame of the truck instead of upon the axle bearings alone, for the frame is suspended on the springs above the axles. There are several ways of taking care of these two forces. The torque may be taken through the rear springs or through separate torque-rods swiveled from the rear-axle housing to the frame. The thrust may be transmitted through the rear springs, or through radius-rods, and these rods may take both thrust and torque, or there may be separate rods for each duty. Where the springs take the thrust they are shackled at the rear end only, and the front end is pin-connected direct to the frame. A combined torque and radius-rod is frequently used for the internal-gear drive axle, and for many of the smaller worm-drive trucks. The larger worm-drive trucks use separate torque and thrust-rods.

The demand for a light truck has been met by making a vehicle which is much lighter for the rated load than the heavier trucks. This is possible because of the higher engine-speed, a more simple final drive, torque and thrust taken through the vehicle springs, and by the generous use of special alloys and heat-treated steels. These trucks are too light for the load

Generated on 2024-09-30 01:27 GMT / https://hdl.handle.net/2027/uiug.30112007838433
Public Domain, Google-digitized / http://www.hathitrust.org/access_use#pd-google
Digitized by Google
Original from UNIVERSITY OF ILLINOIS AT URBANA-CHAMPAIGN

that they are rated to carry as is shown by records, which show that the average life of a light delivery-truck is 35,000 miles, whereas the heavier trucks when properly driven and maintained can be depended upon to give 80,000 to 100,000 miles, or even more for the better grade of trucks. It would seem that there is a real field for a serviceable light truck which will at a little greater cost give enough lower depreciation and maintenance to be a profitable investment.

In California, distillate is being used to quite an extent as a substitute for gasoline. The cost per gallon is about half that of gasoline at the present time, and the B.t.u. content somewhat greater. A local truck-manufacturer has been very successful in equipping trucks with gasifiers by which the heat of the exhaust gases from the engine is used to heat the inlet air as it goes to the carburetor, and also to heat the mixture as it goes from the carburetor to the cylinder. A supply of gasoline is carried and used in starting. The consumption of distillate is about the same as that of gasoline. The success which has attended this innovation would seem to justify the claims of the manufacturer that the use of distillate does not increase carbon trouble. The matter of a lessened volumetric efficiency is negligible.

Tires will outwear the manufacturers' guarantee at least 25% when used on good roads. Overloading and over-speeding are the things that shorten tire life. However, the important consideration is not tire economy, but economy of truck operation per ton of material carried; therefore, durability is only one factor that must be taken into account. Resilience, which prevents the wasting of truck power; cushioning-effect, which keeps the maintenance charges low on the whole truck; a good tractive grip, and a reasonable cost are all properties which are required in a truck tire.

Operating Costs. In discussing motor-truck costs it is not possible to neglect the human factor, which here more than in most cases of machinery-handling is one of the principal items. It is hardly too much to say that maintenance costs are chiefly driver. An expensive and intricate machine is put in charge of a low-paid employee who is not the owner and who ordinarily has but a limited knowledge of machinery. This is one reason why the life of a light truck is usually about two or three years.

It is impossible for the manufacturer to devise a shop test that will equal the brutality of actual service. The modern motor truck has had to meet the demand for a vehicle that will stand abuse. The careless or indifferent driver is quick to find this out. Operating costs for the same make and capacity of truck engaged in exactly the same kind of work for one firm will frequently show a variation of 40% in the items of gasoline, oil, tires, and maintenance. It is easy to see how a poor driver will shorten the life of a truck.

Manufacturers have tried to meet this condition by making truck parts as few and simple as possible; by standardization of parts; by making wrong assemblies impossible; by printing detailed information about oiling and caring for the truck; and by instituting a follow-up service to get the truck owner started right. The truck-governor has helped to solve the speeding problem. Another aid is a recording speedometer, which gives a graphical log of each day's run—velocity plotted against time; thus every minute of the day is accounted for; the number of stops and time of each, maximum speed, etc.

Lubrication is probably the most important item in truck maintenance. Manufacturers have tried to make oiling simple and easy to do by making oiling places few and accessible, and by providing charts and printed instructions for this work; some parts every day, some parts twice a week, etc. Still, there are about seventy places in the average truck that must be lubricated, and if there is no intelligent head to look after this work, local wear soon starts and depreciation is rapid. Motor oil should be changed frequently, at least once for every 1000 to 1500 miles' run. It is not enough to build up the supply, as the oil becomes mixed with carbon and with grit from the intake air and soon loses its lubricating qualities.

In deciding upon a truck, one of the most important questions to settle is that of size. On good roads it is better to buy a truck too small for the work than to buy one that is too large. A 5-ton truck costs 25% more to operate than a 3-ton machine, nor is this cost much reduced by taking a lighter load on the heavier truck. Interest, depreciation, maintenance, taxes, insurance and fuel—all are higher.

Another point that must not be overlooked is that the capacity of a truck is figured for average conditions. A half load on a truck carried over a road full of ruts and chuck-holes is much worse for the truck than a 20% overload on a good concrete or asphalt road. A 6½-ton truck recently carried an 11-ton casting up the Mount Wilson toll road, a distance of 9 miles. This is a tremendous overload, but it can not be said that the truck was injured by it. In fact, it is probable that the truck parts were not weakened, for the road, while steep, is firm and smooth. I do not wish to encourage overloading, which has been responsible for many truck failures, but I do wish to point out that an occasional overload of 25% or even 50% when handled carefully on a good road is not objectionable, while to haul a heavy truck day after day, loaded at half capacity, is a serious matter if one would haul cheaply.

It is possible to buy a truck that is suited for work on good roads or one that is especially designed for rough roads, mud, steep hills, and severe service generally. The problem is to know what is suitable and to weigh properly the arguments of the salesman who offers a 2-ton truck with a 15-hp. motor and a 25-hp. rear axle, and the counter arguments of his rival whose truck has a 25-hp. motor and a 20-hp. rear axle. This is one of the surprising results of the modern method of making a truck from assembled parts, and while for some particular service, there may be advantages of

Generated on 2024-09-30 01:25 GMT / https://hdl.handle.net/2027/uiug.30112007838433
Public Domain, Google-digitized / http://www.hathitrust.org/access_use#pd-google
Digitized by Google
Original from UNIVERSITY OF ILLINOIS AT URBANA-CHAMPAIGN

such variations in the relative strength of truck parts, it is a fact that both extremes are being sold for exactly the same work. The Society of Automobile Engineers has done an important service in standardizing the parts for auto trucks.

Methods of Reducing Trucking Costs. To get a low cost per ton-mile, it is necessary to keep the truck moving. Devices which cut down the time of loading and unloading are important. Among these are self-dumping bodies for various kinds of stone, hot asphalt or lumber; loading-chutes on bins which are filled by elevator or conveyor; there is also a movable steel-tipple which can be run alongside a train of flat-cars and be filled by shovelers while the truck is on the road, so

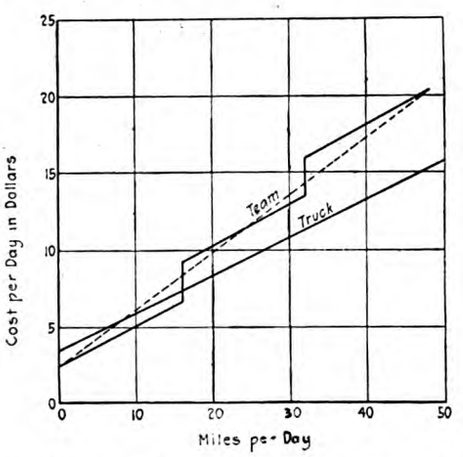

FIG. 1. COMPARISON OF COSTS FOR 5-TON GASOLINE TRUCKS AND HEAVY TEAMS.

that the actual time required to fill the truck is small. Another device is the use of extra truck bodies, which are loaded while the truck is on the road and swung on the truck by an air-lift or other hoist. In interurban-delivery service, loading-nests or cartridges are being used. These are filled in the store and run on the truck. There is some promise in the extension of this device for relieving the congestion around freight stations and also for interurban service where a heavy truck can bring all of the orders for an entire community and local deliveries be handled by light trucks each with its special cartridge.

Fig. 1 gives a comparison between the cost of operating a 5-ton gasoline-truck and heavy teams for such work as rock and dirt hauling and heavy transfer work generally. The costs are figured from actual experience based on a maximum of service per day and from an assumption as to what the costs would be if the vehicle did no work. The curves show that the truck should have enough work to do to occupy the time of more than one team, if it is to be the cheaper vehicle. The Pacific Electric Railway Co. uses heavy trucks for patching the paving along the line. They find that for work outside the business district the truck will do the work of two to three teams, depending upon the length of haul and the size of the job; for long-distance hauling the truck will do the work of four or five teams.

In paving Vernon avenue the rock and crushed stone were delivered by teams, the average haul being about two miles. Each team delivered a 3-ton load and averaged 5½ trips per day. When work on other contracts took the teams away, the work was sublet to another contractor who took the job at the same price per ton as the teams were figured to have cost. Three 5-ton trucks averaged 12 trips per day each, and carried an average of 54.7 tons per day apiece. This makes each truck equivalent to 3.3 teams, which would represent a considerable saving by the use of trucks, provided they could be kept steadily employed.

SHUTTING OFF WATER IN OLD WELLS INCREASES OIL PRODUCTION

The great damage to the Kern River oilfield from infiltrating water has been a matter of common knowledge for some years and the opinion has been expressed that little or no improvement could be expected. The State Mining Bureau has been forced to give most of its attention to the proper drilling of new wells, during its first year's work in the regulation of oil-well drilling, but has been able to attend to a few old cases, and the results are encouraging to operators in flooded fields. In the case of the Del Rey Oil Co. in the Kern River field, the owners working in co-operation with the Bureau shut off bottom water in one well and top water in another with the result that the daily production from the group of wells has increased from 135 to 200 barrels, and the amount of water handled daily has been reduced from 1750 to 120 barrels. Operating costs have been reduced because it has become unnecessary to run a compressor plant to handle the water. The results are also beneficial to neighboring properties.

The behavior of the various wells before and after the repairs is shown in the following table of daily production. Wells No. 1 and 2 are those which were repaired:

	Before repairs		After repairs	
Well No.	Oil	Water	Oil	Water
1	..	....	7	5
2	10	1500	40	15
3	40	40	45	6
6	20	25	25	25
7	0 – 20	150	45	35
8	15	....	15	..
10	20	15	20	15
11	10	20	10	20
Total	135	1750	207	121

The Bureau now has an engineer, G. McGregor, giving his entire attention to the Kern River field. The first step in his work will be a complete examination of the field with a view to determining those districts most seriously affected by water and offering the best opportunities to improve conditions. The data already at hand indicate that comparatively few wells are responsible for most of the damage and that increased production and reduced operating cost may be expected.

Generated on 2024-09-30 01:24 GMT / https://hdl.handle.net/2027/uiug.30112007838433
Public Domain, Google-digitized / http://www.hathitrust.org/access_use#pd-google
Digitized by Google
Original from UNIVERSITY OF ILLINOIS AT URBANA-CHAMPAIGN

Engineers' Note Book

STADIA-REDUCTION CHART

By E. EARL GLASS*

The accompanying chart may be used for computing horizontal distances from stadia readings and observed angles of inclination, the curves giving the correction to be subtracted. Thus for a stadia reading of 100 ft. and an angle of inclination of 8°, the correction is 2 ft. and the horizontal distance is 98 ft. For a stadia reading of 250 ft. and an angle of inclination of 3° 40′, the correction is 1 ft. and the horizontal distance is 249 feet.

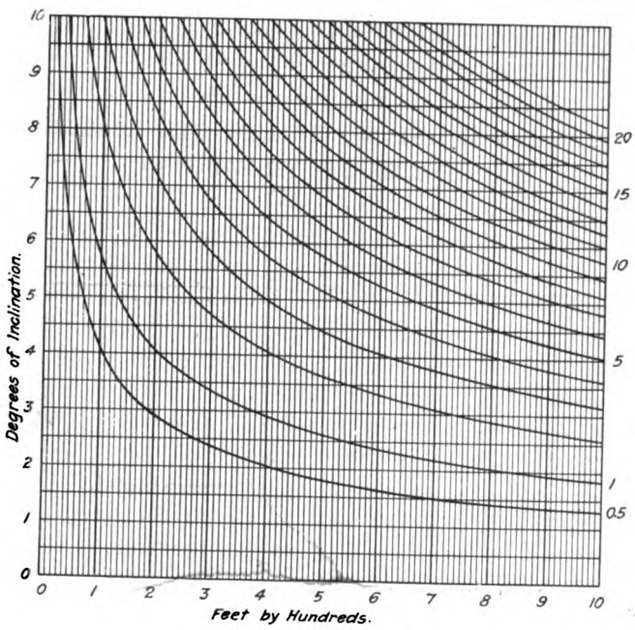

STADIA-REDUCTION CHART.

Industrial Progress

NEW TYPE OF MECHANICAL OIL-PUMP

The oil-pump shown was designed for the lubrication of stationary and portable steam or Diesel oil-engines and air-compressor cylinders. The manufacturers, the Lunkenheimer Co. of Cincinnati, Ohio, exercised great care in the selection of the materials used in the construction of the pump. As practically all operating parts are within the body and either immersed in oil or automatically lubricated, the greatest durability possible is attained.

The operation is as follows, reference being had to the accompanying illustration: Engine-link B-50377 is attached to eccentric-rod or other moving part of engine and connected to link B-50376 by a rod of proper length. Line check B-7354, threaded for ⅛-in. pipe, is furnished for every oil outlet on pump and is attached as close to the steam pipe as possible. The position of the link B-50376 on rod RB-1754A, governs the arc of travel of ratchet-wheel I-1995. Gear I-3965, revolving with ratchet-wheel I-1995, imparts motion to pump-plungers through the mediums of gear I-3965 on eccentric shaft and eccentrics S-625A. Auxiliary plungers being suitably connected with force-pump plungers, move in unison therewith.

*124 North Mott street, Los Angeles.

On the up-stroke of auxiliary plungers, oil is drawn through strainers in bottom of holders SB-402, into auxiliary cylinders B-51841, from where it is forced on downward stroke through tubes CT-24, and passage in parts B-51839 to sight-feeds G-52M. As the oil drops through the sight-feeds, it is drawn into force-pump cylinder on the downward stroke of the plungers S-1939, from where it is forced upon the upward stroke through unions B-6126 to the cylinders to be lubricated. The quantity of oil desired fed is regulated outside the body by auxiliary pump-plunger extension stems RB-2129. Regardless of the level of oil in reservoir, the lubrication of such parts within the body constantly requiring same, is automatically taken care of by an arrangement provided at the bottom of the force-pump plunger.

The pump operates only while the engine is running, and

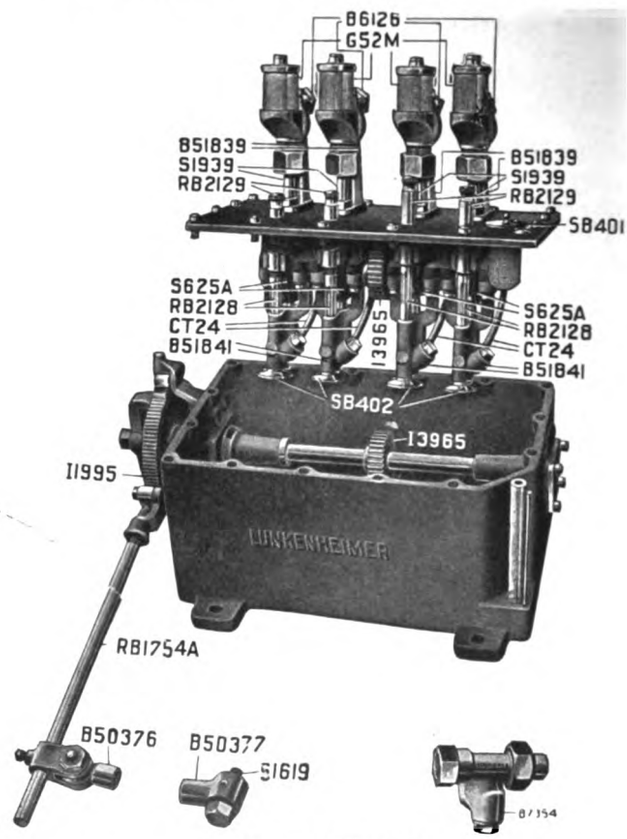

NEW TYPE OF OIL-PUMP.

automatically feeds more or less oil according to the speed of the engine; consequently there is no waste of oil. Every outlet is provided with a sight-feed. These are large, will not become oil splashed, and the dropping oil can be plainly seen from a distance. Independent feed regulation for each outlet is also provided. They can readily be adjusted without the use of tools or the removal of any of the parts. The filling hole is large for convenience in filling. A sliding cap, to prevent dirt from entering, is provided, and within the opening is a bronze strainer which can readily be removed for cleaning. The pump can be had with from one to four feeds, the one-feed having a capacity of one quart or half-gallon, the two-feed, half-gallon or one gallon, and the three and four-feed, one gallon.

PUMPING WATER WITH COMPRESSED AIR

One of the most interesting air-lift plants in the South-west is the one on the J. A. White ranch, three miles north-west of Fort Bliss, near El Paso, Texas. One class N-SO Chicago pneumatic compressor pumps two wells, each 600 ft. deep, the

Generated on 2024-09-30 01:24 GMT / https://hdl.handle.net/2027/uiug.30112007838433
Public Domain, Google-digitized / http://www.hathitrust.org/access_use#pd-google
Digitized by Google
Original from UNIVERSITY OF ILLINOIS AT URBANA-CHAMPAIGN

water standing 250 ft. from the surface. The compressor forces the air down into the wells, and although they are not yet entirely free from sand, the water is raised in sufficient volume to supply a town of 2000 inhabitants.

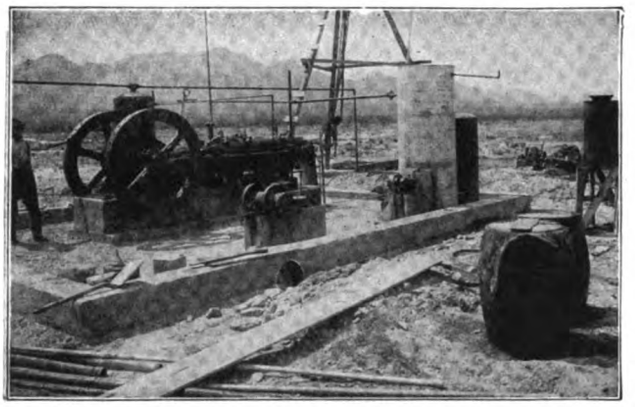

PLANT FOR PUMPING WATER BY COMPRESSED AIR.

Class N-SO compressors are made in four standard strokes, 8, 10, 12, and 14 in., with capacities from 70 to 300 cu. ft. They may be supplied portable (on truck) or skid mounted as well as stationary, and are manufactured by the Chicago Pneumatic Tool Company.

Book Reviews

PASSENGER TERMINALS AND TRAINS. By John A. Droege. P. 392. Ill., index. McGraw-Hill Book Co., New York. For sale by *Mining and Scientific Press*, San Francisco. Price, $5.

In consideration of the large investments made by most railroad companies in their passenger terminals, the literature on the subject, particularly before the appearance of the present volume, has been remarkably scanty. The book is on the same general plan as 'Freight Terminals and Trains' by the same author. Its scope can best be judged by the chapter-headings, which are General Principles, Construction and Maintenance Details, Interlocking and Approaches, Through or Side Stations, Head or Stub Stations, Water-Front Terminals, The Passenger Terminals of New York City, Trackage or Terminal Arrangements, Passenger Terminal Operation, The Station Master, Train Indicators, Baggage-Handling and the Parcel-Room, Car-Cleaning Plants, Small Stations, Passenger Trains and Terminals of Foreign Countries, Electrification, Time-Tables and Train Schedules, Passenger-Train Operation, Accidents and Their Prevention, The Commissary, and Statistics of Passenger Service. The book is well illustrated with both photographs and plans of important terminals.

WATER-POWER. By William P. Mason. Fourth Edition. P. 495. Ill., index. John Wiley & Sons, New York. For sale by *Mining and Scientific Press*, San Francisco. Price, $3.75.

As the author states, the subject is considered principally from the sanitary standpoint. After an introductory chapter devoted mainly to ancient water supplies, the relation of drinking-water to disease, particularly to typhoid fever and cholera, is discussed. The next chapter discusses artificial purification of water, including slow and rapid filtration, chlorine and hypochlorite, ozone, distillation, and the ultra-violet ray, as well as special plants for the removal of particular chemicals. Under natural purification, nitrification, oxidation, sedimentation, and the action of sunlight are considered. Rain, ice, and snow are next considered, with particular reference to sources of pollution. Then follow chapters upon rivers and stream-water, stored water, ground-water, and water from deep wells. Consumption per capita is then discussed, with special reference to the greater consumption and waste in American than in European cities. The last chapter is devoted to the action of water upon metals, which includes the question of boiler-water and the formation of scale. The large number of illustrations and an unusually complete index both add to the value of the book, which will be useful to the health officer as well as the hydraulic engineer and water-works superintendent.

New Publications

GEOGRAPHIC TABLES AND FORMULAS. Compiled by S. S. Gannett. P. 386. Ill., index. Bulletin No. 650, U. S. Geological Survey, Washington, D. C. Price, 25 cents. The tables contained in this bulletin include natural sines and cosines, logarithmic trigonometric functions, logarithms of numbers, azimuths of Polaris for different hour-angles, co-ordinates for the projection of maps, geodetic-position computations, and stadia-reductions, etc. There is also a discussion of the 'three-point problem' and of the determination of the meridian by observations on Polaris. While the bulletin is primarily intended for those engaged in precise surveying and mapping, it will be of value to other engineers as well.

RULES, REGULATIONS, FORMS, AND PRACTICE RELATIVE TO THE CONTROL, DISTRIBUTION, AND USE OF THE WATER RESOURCES OF OREGON. Bulletin No. 6, Office of the State Engineer, Salem, Oregon. P. 70. Ill. Contains a summary of the Oregon Water Code written in non-technical language. This summary is divided into three parts, namely, initiation of new water-rights, determination of water-rights, and distribution of water. There is also a summary of court decisions affecting the Water Code, and a complete set of the blank forms used in connection with the working of the different parts of the Code. The bulletin should be of interest, not only to residents of Oregon, but to engineers and others interested in water-right legislation in other States.

Civil Service Examinations

ASSISTANT CHEMIST IN FOREST PRODUCTS, January 17-18. Salary $900 to $1500. Technical graduates only. Age under 50. Application form 1312. Usual places of examination.

ASSISTANT EXAMINER, PATENT OFFICE, January 17-19. Salary $1500. Subjects of examination include physics, mathematics, mechanics, chemistry, French or German, and mechanical drawing. Age 20 or over. Application form 1312. Usual places of examination.

AID QUALIFIED IN CHEMISTRY, January 17-18. Bureau of Standards. Salary $600 to $840. Subjects include mathematics, physics, and chemistry. Age 18-22. Application form 1312. Usual places of examination.

SURVEYOR. January 17-18. General Land Office. Salary $1200 to $1800. Age 19 or over. Application form 1312. Usual places of examination.

MECHANICAL DRAFTSMAN, January 17-18. Patent Office. Salary $1000. Age 18 or over. Application form 304. Usual places of examination.

SENIOR STRUCTURAL ENGINEER, January 23. Interstate Commerce Commission. Salary $3000 to $4000. Graduation from technical school and five years' responsible experience, or else ten years' experience required. Age 30 to 60. Application form 2039. Candidates will not be assembled for examination.

ARCHITECTURAL DRAFTSMAN, January 23. Salary $1560. Graduation in architecture and two years' experience or two years of atelier study and six years' experience required. Age under

Generated on 2024-09-30 01:23 GMT / https://hdl.handle.net/2027/uiug.30112007838433
Public Domain, Google-digitized / http://www.hathitrust.org/access_use#pd-google
Digitized by Google
Original from UNIVERSITY OF ILLINOIS AT URBANA-CHAMPAIGN

50. Application form 2118. Candidates will not be assembled for examination.

JUNIOR STRUCTURAL STEEL DRAFTSMAN, Navy Department. Salary $3.52 to $4. Age 20 or over. Candidates will not be assembled for examination, and applications will be received at any time. Application form 1312.

SHIP DRAFTSMAN, Navy Department. Salary $3.28 to $6 and over. Age 18 and over. Candidates will not be assembled for examination and applications will be received at any time. Application form 1312.

ELECTRICAL DRAFTSMAN, Navy Department. Salary $3.52 to $6. Age 18 or over. Candidates will not be assembled for examination and applications will be received at any time. Application form 1312.

Engineering Societies

IDAHO SOCIETY OF ENGINEERS. Ira F. Schaffner, secretary, Boise.

Los Angeles Section of AMERICAN SOCIETY OF MECHANICAL ENGINEERS. Ford W. Harris, secretary, 1029 Higgins building.

Los Angeles Section of AMERICAN INSTITUTE OF ELECTRICAL ENGINEERS. Edward Woodbury, secretary, 255 East 3rd street.

OREGON SOCIETY OF ENGINEERS. Orrin E. Stanley, secretary, room 409, City Hall, Portland.

Portland Section, AMERICAN INSTITUTE OF ELECTRICAL ENGINEERS. Paul Lebenbaum, secretary, 45 Union Depot.

Portland Association of Members of AMERICAN SOCIETY OF CIVIL ENGINEERS. Charles McGonigle, president, care Western Sheet Metal Works.

San Francisco Association of Members of AMERICAN SOCIETY OF CIVIL ENGINEERS. E. T. Thurston, Jr., secretary, Mechanics Institute building.

San Francisco Section of AMERICAN SOCIETY OF MECHANICAL ENGINEERS. Carl F. Braun, secretary, Hooker & Lent building.

San Francisco Section of AMERICAN INSTITUTE OF ELECTRICAL ENGINEERS. A. G. Jones, secretary, 811 Rialto building.

Southern California Association of Members of AMERICAN SOCIETY OF CIVIL ENGINEERS. W. K. Barnard, secretary, 701 Central building, Los Angeles.

UTAH SOCIETY OF ENGINEERS. Hugh C. Lewis, secretary, Capitol building, Salt Lake City, Utah.

THE regular bi-monthly meeting of the San Francisco Association of Members of the American Society of Civil Engineers was held December 19 at the Palace hotel. John D. Galloway was elected president of the Association for the coming year, H. J. Brunnier, vice-president, and E. T. Thurston, secretary. The paper of the evening on 'Undertones of Engineering' was given by J. W. Swaren.

Coming Conventions

AMERICAN ROAD BUILDERS' ASSOCIATION. Annual convention, Boston, Mass., February 5-9, 1917. E. L. Powers, secretary, 150 Nassau street, New York. The National Good Roads Show of Materials and Machinery will be held in connection with this convention.

MID-WEST CEMENT USER'S ASSOCIATION. Annual convention. Omaha, Neb., March 6-10, 1917. Frank Whipperman, secretary, 28th avenue and Sahler street, Omaha.

NATIONAL BUILDERS' SUPPLY ASSOCIATION, Chicago, February 12-13. L. F. Desmond, secretary, 1211 Chamber of Commerce, Chicago, Illinois.

TENTH ANNUAL CEMENT SHOW, Chicago, February 7-15, 1917.

AMERICAN CONCRETE PIPE ASSOCIATION. Annual convention, Chicago, February 12-14. E. S. Hanson, secretary, 538 South Clark street, Chicago.

IDAHO SOCIETY OF ENGINEERS. Annual convention, Boise, January, 18-20. Ira F. Schaffner, secretary, Boise.

AMERICAN SOCIETY OF CIVIL ENGINEERS. Annual meeting, New York, January 17-18. Charles Warren Hunt, secretary, 220 West 57th street, New York.

AMERICAN CONCRETE INSTITUTE. Annual meeting, Chicago, February 8-10. H. D. Hynds, secretary, 30 Broad street, New York.

SOUTHWESTERN CONCRETE ASSOCIATION. Annual meeting, Kansas City, Mo., February 19-24. Charles A. Stevenson, secretary, 1413 West 10th street, Kansas City.

Personal

M. H. PECK is investigating channel conditions between Mare Island navy yard and the Golden Gate for the Citizens' Committee of Vallejo, California.

C. K. CLARKE has been appointed chief engineer for the Imperial irrigation district succeeding C. R. ROCKWOOD. His headquarters will be at El Centro, California.

GEORGE B. STURGEON, formerly construction engineer for the University of California, with headquarters at Berkeley, has resigned to engage in irrigation work in southern California.

The following officers have been elected by the San Diego Association of Members of the American Society of Civil Engineers: W. J. GOUGH, president; W. S. POST, vice-president; and J. R. COMLY, secretary-treasurer.

O. LAURGAARD, consulting engineer of Portland, Oregon, has completed a report on the Horse Heaven irrigation project in Benton county, Washington. Mr. Laurgaard was recently elected to the Oregon State legislature.

The American Association of State Highway Officials has elected the following officers for the ensuing year: GEORGE P. COLEMAN, president; A. B. FLETCHER, vice-president; JOSEPH HYDE PRATT, secretary; and F. F. ROGERS, treasurer.

J. C. BRANNER has been elected president and D. T. MACDOUGAL, vice-president of the Pacific division of the American Association for the Advancement of Science. The Pacific division of the Association will hold a meeting at Stanford University on April 4-7.

W. L. CLARK, formerly assistant engineer for the California State Highway Commission, has been appointed division engineer with headquarters in San Francisco, succeeding A. E. LODER, who resigned to become assistant chief engineer for the U. S. Office of Public Roads.

At the annual meeting of the American Society of Mechanical Engineers the following officers were elected for the ensuing year: IRA N. HOLLIS, president; CHARLES H. BENJAMIN, ARTHUR M. GREENE, and CHARLES T. PLUNKETT, vice-presidents; ROBERT M. FERNALD, WILLIAM D. GREGORY, and C. R. WEYMOUTH, managers; and WILLIAM H. WILEY, treasurer.

Commercial Paragraphs

The MOORE & WHITE CO., Philadelphia, has issued a 64-page pamphlet on 'Friction Clutches for High Speeds.'

The YUBA CONSTRUCTION CO., San Francisco, has published a catalogue containing much valuable data regarding the dredges manufactured by the company.

The OSGOOD CO., Marion, Ohio, has published circulars No. 14 and 18 describing the application of the Osgood 18 shovel to trench excavating and to road grading, cellar excavating, etc.

STEPHENSON & NICHOLS, Monadnock Bdg., San Francisco, will represent the Terry Steam Turbine Co. of Hartford, Connecticut, their territory comprising northern and central California and northern Nevada.

Generated on 2024-09-30 01:23 GMT / https://hdl.handle.net/2027/uiug.30112007838433
Public Domain, Google-digitized / http://www.hathitrust.org/access_use#pd-google
Digitized by Google
Original from UNIVERSITY OF ILLINOIS AT URBANA-CHAMPAIGN

Western Engineering

WEEKLY NEWS BULLETIN

WESTERN ENGINEERING *with* WEEKLY NEWS BULLETIN $4.50 per Year

SAN FRANCISCO, JANUARY 2, 1916

SINGLE COPIES WEEKLY NEWS BULLETIN 15 Cents

Contracts Pending

Bids will be Received		See Issue of News Bulletin
Jan. 2.	Berkeley, Cal., Street Work	Jan. 2
Jan. 2.	Claremont, Cal., Street Work	Dec. 26
Jan. 2.	Colusa, Cal., Street Work	Dec. 26
Jan. 2.	Denver, Colo., Machinery and Supplies	Jan. 2
Jan. 2.	El Centro, Cal., Bridge	Dec. 26
Jan. 2.	Everett, Wash., Bridge	Dec. 26
Jan. 2.	Los Angeles, Cal., Sewer	Jan. 2
Jan. 2.	Los Angeles, Cal., Street Work	Jan. 2
Jan. 2.	Martinez, Cal., Street Work	Dec. 26
Jan. 2.	Redwood City, Cal., Street Work	Jan. 2
Jan. 2.	Redwood City, Cal., Supplies	Dec. 11
Jan. 2.	San Bernardino, Cal., Street Work	Jan. 2
Jan. 2.	San Francisco, Cal., Building	Dec. 18
Jan. 2.	Santa Rosa, Cal., Machinery	Jan. 2
Jan. 2.	Seattle, Wash., Road Work	Dec. 18
Jan. 2.	Stockton, Cal., Road Work	Dec. 18
Jan. 3.	Fresno, Cal., Water Supply	Dec. 18
Jan. 3.	Hanford, Cal., Street Work	Dec. 26
Jan. 3.	Placerville, Cal., Road Work	Dec. 18
Jan. 3.	Portland, Ore., Sewer	Dec. 26
Jan. 3.	Salt Lake City, Utah, Bridge	Dec. 18
Jan. 3.	Washington, D. C., Miscellaneous	Dec. 11
Jan. 3.	Washington, D. C., Supplies	Dec. 18
Jan. 5.	Oroville, Cal., Road Work	Dec. 26
Jan. 5.	Portland, Ore., Miscellaneous	Jan. 2
Jan. 5.	San Francisco, Cal., Water Supply	Jan. 2
Jan. 6.	Fort Keogh, Mont., Machinery and Supplies	Dec. 18
Jan. 8.	Artesia, Cal., River Work	Jan. 2
Jan. 8.	Los Angeles, Cal., Buildings	Dec. 18
Jan. 8.	Los Angeles, Cal., Road Work	Jan. 2
Jan. 8.	Mill Valley, Cal., Street Work	Jan. 2
Jan. 8.	Sydney, Australia, Machinery	Dec. 18
Jan. 9.	Bakersfield, Cal., Road Work	Dec. 26
Jan. 9.	Hanford, Cal., Road Work	Jan. 2
Jan. 9.	Modesto, Cal., Bridge	Dec. 18
Jan. 9.	Modesto, Cal., Road Work	Jan. 2
Jan. 9.	Salt Lake City, Utah, Sewer	Dec. 26
Jan. 9.	San Rafael, Cal., Road Work	Jan. 2
Jan. 9.	Washington, D. C., Supplies	Dec. 26
Jan. 10.	Denver, Colo., Supplies	Jan. 2
Jan. 10.	Fresno, Cal., Bridge	Dec. 26
Jan. 10.	South Bend, Wash., Road Work	Dec. 18
Jan. 11.	Oakland, Cal., Street Work	Jan. 2
Jan. 12.	Berkeley, Cal., Machinery	Jan. 2
Jan. 12.	El Centro, Cal., Irrigation	Jan. 2
Jan. 15.	Everett, Wash., Road Work	Dec. 26
Jan. 15.	Fresno, Cal., Building	Jan. 2
Jan. 15.	Sunnyvale, Cal., Water Supply	Dec. 18
Jan. 15.	Washington, D. C., Building	Jan. 2
Jan. 15.	Washington, D. C., Power	Dec. 26
Jan. 16.	Seattle, Wash., Building	Jan. 2
Jan. 16.	Seattle, Wash., Road Work	Dec. 18
Jan. 17.	Riverside, Cal., Bridge	Jan. 2
Jan. 19.	Washington, D. C., Building	Jan. 2
Jan. 22.	Washington, D. C., Building	Dec. 26
Jan. 23.	San Francisco, Cal., Supplies	Jan. 2
Jan. 31.	San Francisco, Cal., Machinery	Jan. 2
Feb. 1.	Coalinga, Cal., Water Supply	Jan. 2
Feb. 1.	Tia Juana, Mex., Building	Dec. 26
Feb. 5.	Washington, D. C., Building	Jan. 2
June 1.	Calcutta, India, Sewer	Jan. 2

Building Permits

In SAN FRANCISCO; $2500 and over in valuation.

DECEMBER 22

Warehouse Alterations—Cost $30,000. American Can Co., owner. S 19th and Treat Ave to Harrison.

Office Alterations—Cost $7000. California Packing Corp., owner. SW California and Davis.

Two Story Frame Dwelling—Cost $3000. James Welsh, owner. E 18th Ave 100 N Balboa.

DECEMBER 26

Two Story Frame Store and Flats—Cost $5000. John Wahren, owner. SW Balboa and 17th Ave.

DECEMBER 27

Two Story Frame Dwelling—Cost $2900. Lederman Building Co., owner. E 16th Ave 37 N Kirkham.

Two Story Frame Dwelling—Cost $2900. Lederman Building Co., owner. E 16th Ave 70 N Kirkham.

Two Story Frame Dwelling—Cost $2900. Lederman Building Co., owner. E 16th Ave 103 N Kirkham.

Two Story Frame Dwelling—Cost $2900. Lederman Building Co., owner. E 16th Ave 136 N Kirkham.

Two Story Frame Dwelling—Cost $2900. Lederman Building Co., owner. E 16th Ave 169 N Kirkham.

Two Story Frame Dwelling—Cost $2900. Lederman Building Co., owner. E 16th Ave 202 N Kirkham.

Seven Story Concrete Tenements—Cost $80,000. A. W. Wilson, owner. N Jackson 42 W Franklin.

Two Story Frame Residence—Cost $33,000. Frank B. King, owner. NE Jackson and Laurel.

DECEMBER 28

Two Story Frame Residence—Cost $11,000. St. Francis Home Building Co., owner. E Santa Clara 55 N San Anselmo.

Generated on 2024-09-30 01:23 GMT / https://hdl.handle.net/2027/uiug.30112007838433
Public Domain, Google-digitized / http://www.hathitrust.org/access_use#pd-google
Digitized by Google
Original from UNIVERSITY OF ILLINOIS AT URBANA-CHAMPAIGN

Construction News

STREET AND ROAD WORK

Asotin, Wash.—Contract for improvement of Silcott highway has been awarded to McGuire Bros., Inc., Seattle, for $9975.

Bakersfield, Cal.—All bids for paving 20th street have been rejected because of misunderstanding on part of property-owners regarding character of pavement. Work will be re-advertised.

Berkeley, Cal.—Bids will be received until 10 a.m., January 2, by A. G. Briggs, city clerk, for grading and construction of concrete curbs and oil-macadam pavement for 240 lin. ft. on Snyder street.

Daly City, Cal.—Contract for improving several streets has been awarded to Ransome-Crummey Co., First Savings Bank Bdg., Oakland.

Hanford, Cal.—Bids will be received until 11 a.m., January 9, by E. F. Pickerill, county clerk, for construction of 11¾ miles of county highway.

County highway work, bids for which are to be received until 11 a.m., January 9, by E. F. Pickerill, county clerk, comprises 12,000 cu. yd. excavation, 755,000 sq. ft. of 1½-in. topeka wearing surface on 2½-in. asphaltic concrete base, and 500 ft. of guard fence. Plans from County Highway Commission upon payment of $5.

Los Angeles, Cal.—Bids will be received until 2 p.m., January 2, by Board of Supervisors for construction of 0.454 mile of concrete pavement on Azusa avenue. Estimated cost is $1891.90.

Board of Supervisors will receive bids until 10 a.m., January 8, for construction of 1.76 miles of oil-macadam pavement on Redondo-Torrance highway. Estimated cost is $8784.70.

Contract for improving Ardmore avenue has been awarded to C. A. Roberts, 1350 West Temple street, for $4593.13.

Contract for improvement of Arcadia street has been awarded to Ford & Stout, Bradbury Bdg., for $3871.41.

Contract for construction of 1.11 miles of concrete in road district No. 112 has been awarded to Fred Hoffman, 111 East 12th street, Long Beach, for $15,000.

Contract for improving 57th street has been awarded to C. A. Roberts for $1391.89.

Contract for construction of 1.65 miles of macadam pavement on Florence avenue has been awarded to T. E. Shafer, 1327 Waterloo street, for $6849.

Following bids have been received for improvement of 48th street: California-Arizona Construction Co., $32,205.70; Fairchild-Gilmore-Wilton Co., $33,267.51; Bryant & Austin, Inc., $34,117.75. Engineer's estimate was $30,257.40.

All bids for improving Virgil avenue have been rejected because too high and work will be re-advertised.

Mill Valley, Cal.—Bids will be received until 8 p.m., January 8, by Will Falley, town clerk, for construction of bituminous concrete pavement on cement concrete base, and concrete curbs, gutters, sidewalks, and retaining walls on several streets.

Modesto, Cal.—Bids will be received until 2:30 p.m., January 9, by the Board of Supervisors for construction of concrete highway from Modesto to Empire, 4.4 miles.

Oakland, Cal.—Bids will be received until noon, January 11, by D. W. Cummings, city clerk, for grading and construction of concrete curbs, asphalt pavement, and brick gutters on 16th street.

Redwood City, Cal.—Bids will be received until January 2, by J. H. Nash, county clerk, for construction of parts of Skyline boulevard.

Richmond, Cal.—Contract for construction of macadam pavement on 25th, 26th, and 28th streets has been awarded to John Word, 436 13th street, for $2992.48. Other bidders were: H. F. Fallon, $3219.90; L. L. Page, $3363.47; Fred Meyers, $3419.28; Johnson & Aguirre, $3573.33; S. C. Rogers, $4012.92.

Riverside, Cal.—The following unit prices were named in the bid of Johnson-Shea Co., which was awarded the contract for improvement of North Market street: macadam pavement, $0.09 per sq. ft.; concrete sidewalks, $0.12 per sq. ft.; combined curb and gutter, $0.48 per lin. ft.; concrete and corrugated iron culvert, $1.50 per ft.; three catch-basins and 300 ft. of 10-in. sewer complete, $200; lighting system consisting of 21 one-lamp standards, conduit, etc., $500.

San Bernardino, Cal.—Bids will be received until 9 a.m., January 2, by R. B. Stover, secretary board of education, for construction of concrete sidewalks and curbs at Polytechnic high school.

San Diego, Cal.—Fairchild-Gilmore-Wilton Co., Pacific Electric Bdg., Los Angeles, was low bidder at $14,960 for construction of pavement on University avenue.

San Francisco, Cal.—Contract for grading South Taraval street for Fernando Nelson has been awarded to A. E. Buckman, 62 Post street, for $0.17 per cubic yard.

Contract for construction of strip of asphalt pavement along Embarcadero between pier No. 29 and pier No. 41 has been awarded to Fay Improvement Co., Phelan Bdg., for $15,424.

Contract for improvement of Harold avenue, Irving street, and Edna street has been awarded to Federal Construction Co., Sharon building.

Contract for improvement of 29th street has been awarded to J. F. Dowling, Russ building.

War Department will construct Ocean boulevard at Presidio. Plans include reinforced concrete viaduct at Lobos creek.

San Rafael, Cal.—Bids will be received until 2 p.m., January 9, by R. E. Graham, county clerk, for improvement of three miles of Fairfax and Bolinas highway.

Seattle, Wash.—Contract for paving Ferry avenue and other streets has been awarded to McGuire Bros., Inc., 523 First avenue, for $13,438.95.

Taft, Cal.—Edward M. Lynch, Glendale, is preparing plans for paving several streets.

SEWERS AND DRAINAGE

Calcutta, India.—Bids will be received until June 1 by the deputy chairman of the Corporation of Calcutta for construction of storm-water pumping plant. Plans from 'Indian and Eastern Engineer,' 50 Fenchurch street, London, England, or from C. C. Chatterjee, secretary to corporation, Calcutta, upon payment of $2.50.

Gustine, Cal.—Election has been called for January 15 to vote on bond issue of $12,000 for construction of sewer system.

Los Angeles, Cal.—Board of Public Works will receive bids until 10 a.m., January 2, for construction of sewer in Gaffey street.

Sacramento, Cal.—Contract for construction of sewers in Wright & Kimbrough tract No. 21 has been awarded to Joe Lawrence, Broderick.

San Francisco, Cal.—Contract for construction of sewers on Bocana street has been awarded to D. L. Bienfield, Phelan building.

San Leandro, Cal.—Contract for construction of 6-in. sewer on Hepburn street has been awarded to Manuel Nunes.

BRIDGES AND CULVERTS

Fallon, Nev.—Contract for construction of bridge across Carson river has been awarded to E. R. Bendle.

Port Angeles, Wash.—Contract for construction of concrete bridge over Clallam river has been awarded to Charles G. Huber, Seattle, for $2360.

Riverside, Cal.—Bids will be received until 11 a.m., January 17, by A. B. Pilch, county clerk, for construction of Cottonwood Canyon bridge.

IRRIGATION AND WATER SUPPLY

Alpaugh, Cal.—Bond issue of $283,000 of Alpaugh irrigation district has been sold to J. R. Mason & Co., San Francisco, for 92.127. The construction work is nearly completed.

Anderson, Cal.—Thomas H. Means, 58 Sutter street, San Francisco, consulting engineer for the Anderson-Cottonwood irrigation district, has reported that it will cost $488,000 in addition to the original bond issue to complete the system.

Generated on 2024-09-30 01:24 GMT / https://hdl.handle.net/2027/uiug.30112007838433
Public Domain, Google-digitized / http://www.hathitrust.org/access_use#pd-google
Digitized by Google
Original from UNIVERSITY OF ILLINOIS AT URBANA-CHAMPAIGN

Coalinga, Cal.—Bids will be received until February 1 by F. G. Dessery, consulting engineer, 514 Central Bdg., Los Angeles, for construction of municipal water system, including submerged dam in Warthan canyon and pipe-line 9 miles long.

El Centro, Cal.—Bids will be received until 10 a.m., January 12, by F. H. McIver, secretary Imperial irrigation district, for construction of the Rockwood intake-gate. This structure will be of reinforced concrete and will be 745 ft. long, 60 ft. wide. It will be on the California side of the Colorado river about eight miles below Yuma.

M. D. Goodbody, American National Bank Bdg., San Diego, has been awarded contract for construction of intake canal at Hanlon Heading at $0.25 per cu. yd. for earth, and $1.50 per cu. yd. for rock, a total of $150,150. There is only 100 cu. yd. of rock. Other bidders were: M. W. Wogan, Denver, $195,150; Rogers Bros. Co., Los Angeles, $234,078; Shattuck-Edinger Co., Los Angeles, $255,120.

Gustine, Cal.—Election has been called for January 15 to vote on bond issue of $15,000 for construction of water system.

Hanford, Cal.—Edward M. Lynch, consulting engineer, Glendale, has prepared plans for improvements to water system. Estimated cost is $44,000, which is mainly for laying additional pipe. Money will be raised by bond issue.

Mexicali, Mex.—Contract for construction of Tecolote canal for the Mexican company controlled by the Imperial irrigation district has been awarded to R. P. Shields Construction Co., American National Bank Bdg., San Diego, for $0.187 per cu. yd. or $92,841 in all.

Paradise, Cal.—Assistant state engineer P. M. Norboe has approved plans for system for Paradise irrigation district but advises increasing proposed bond issue from $285,000 to $350,000.

Prosser, Wash.—O. Laurgaard, Railway Exchange Bdg., Portland, Ore., has reported that the Horse Heaven irrigation project is feasible. He recommends the construction of system to irrigate 210,000 acres by gravity at a cost of $9,500,000, mainly for a canal with a capacity of 1250 second-feet, and later extending the system to cover 300,000 acres in all at a total cost of $24,000,000.

San Francisco, Cal.—War Department will start work soon on development of Lobos Creek watershed at Presidio. Plans include reinforced concrete dam, water mains, and sedimentation-tanks. Estimated cost is $80,000.

Board of Public Works will receive bids until January 5 for making core-borings for Hetch-Hetchy project.

Washington, D. C.—Reclamation Commission has recommended appropriation of $400,000 for construction of Warm Springs dam on Malheur project, Oregon, $400,000 for construction of dam on Owyhee project, Oregon, and $200,000 for construction of King Hill project, Idaho.

Waterford, Cal.—Contract for construction of sections No. 1 and 2 of system of Waterford irrigation district has been awarded to James Willison, Oakdale and Redding, at $15,800 for section No. 1 and $23,540 for section No. 2. Section No. 1 comprises 45,000 cu. yd. of canal excavation, mainly hardpan and sand-rock. Section No. 2 comprises 2200 lin. ft. of 8-ft. circular tunnel and 9800 cu. yd. of portal excavation. Other bidders were: Hoskins & Bagley, Turlock, $29,955 for section No. 2; Tieslau Bros., San Francisco, $23,490 for section No. 1; C. B. Cowden, San Francisco, $16,470 for section No. 1 and $35,220 for section No. 2; Tibbitts-Pacific Co., San Francisco, $18,660 for section No. 1, and $26,560 for section No. 2; C. H. & A. W. Gorrill, San Francisco, $33,270 for section No. 2.

Contract for construction of 900 lin. ft. of plaster-lined timber flume across main canal of Modesto irrigation district has been awarded by directors of Waterford irrigation district to C. H. & A. W. Gorrill, Call Bdg., San Francisco, for $3823.40.

Contract for construction of concrete siphon for Waterford irrigation district has been awarded to Tibbitts-Pacific Co., 16 California street, San Francisco, for $2781.50.

LIGHT, HEAT, AND POWER

Chico, Cal.—Contract for construction of electrolier system has been awarded to Western Gas & Electric Appliance Company.

Hanford, Cal.—Fred Hamilton has prepared plans for proposed ornamental lighting system in business district.

Los Angeles, Cal.—Election has been calleed for February 2 to vote on bond issue of $12,000,000 for purchase of distribution systems of Southern California Edison Co. and Pacific Light & Power Corporation.

RIVER AND HARBOR WORK

Artesia, Cal.—New bids will be received until 2 p.m., January 8, by J. W. Reagan, engineer for New San Gabriel River levee district, 348 Court House, for construction of earth levees on both banks of the San Gabriel river for about 14,000 lin. ft. Estimated cost is $8000.

El Paso, Tex.—Following bids have been received by U. S. Reclamation Service for 185,000 cu. yd. canal excavation and 29,000 cu. yd. levee work: Lee Moor Contracting Co., Republic Bdg., $39,931.20; D. O. Johnson, Phoenix, Arix., $62,617.60. Bids of J. C. Plemmons, Arrey, N. M., and Mundy & Wolfe, Las Cruces, N. M., were incomplete.

Porterville, Cal.—Levees will be constructed on Tule river to protect city from overflow. Work will be under direction of B. O. Lovelace, county surveyor, Visalia.

Richmond, Cal.—City council has rejected the bid of the Healy-Tibbitts Construction Co. for construction of rock fill at municipal wharf. New bids will be received until January 9 by A. C. Faris, city clerk.

San Francisco, Cal.—Following bids have been received for dredging in Oakland harbor: San Francisco Bridge Co., Nevada Bank Bdg., $0.074 per cu. yd.; American Dredging Co., 21 California street, $0.0842; Standard American Dredging Co., 414 13th street, Oakland, $0.087.

Seattle, Wash.—Contract for construction of dock at county ferry has been awarded to C. Geske & Co., Pacific Block, for $7853.

RAILROAD WORK

Bingham, Utah.—Utah Copper Co. is preparing plans for electrification of its railroad to Garfield. Estimated cost is $4,000,000.

Calipatria, Cal.—Contract for grading railroad from Calipatria to Westmoreland, 12 miles, for Southern Pacific Co., has been awarded to Jackson & Lockhart, Brawley.

Princeton, B. C.—Canada Copper Corp., Ltd., will construct stamp-mill and 13 miles of railroad.

Salt Lake City, Utah.—Contract for grading railroad for Western Pacific Railway from Grants to Tooele, 16 miles, has been awarded to Utah Construction Co., Ogden.

Seattle, Wash.—Great Northern Railway is preparing plans for electrification of Cascade division at a cost of $5,000,000. Plans for other work include double-tracking 34 miles of line, increasing yard facilities at Leavenworth, Wenatchee, and Wilson Creek, Washington, and Great Falls, Montana, and construction of concrete bridges and snow-sheds in Montana.

BUILDING CONSTRUCTION

Fresno, Cal.—Bids will be received until January 15 by E. Mathewson, Cory Bdg., for construction of six-story class A building on J street near Mariposa. Estimated cost is $165,000.

R. F. Felchin, Rowell Bdg., was low bidder at about $90,000 for construction of reinforced concrete hospital-building for Burnett Sanitarium.

Glass & Butner, Republican Bdg., have completed plans for building for Pacific Coast Grocery Co. and call for bids will be issued soon. Estimated cost is $100,000.

Galt, Cal.—Utah Condensed Milk Co. will construct plant.

Los Angeles, Cal.—John C. Austin, Baker-Detwiler Bdg., is preparing plans for building for First Methodist Church. Estimated cost is $350,000.

Contract for construction of brick factory-building for R. W. Pridham & Co. has been awarded to Pozzo Construction Co., 421 Macy street, for $30,650.

Modesto, Cal.—Contract for construction of building for grammar school has been awarded to W. A. Stevens, Route B, for $27,809.38. Philbrick & Colvin, Lodi, bid $28,637. Turner Hardware & Implement Co., 902 H street, has been awarded contract for heating and ventilating at $5099.50, and for plumbing at $4432.

Oakland, Cal.—Construction of $1,000,000 post-office building is proposed.

Oregon City, Ore.—Hawley Pulp & Paper Co. will construct $750,000 addition to plant.

Palo Alto, Cal.—Contract for construction of frame and c crete building for Cranston & Smith has been awarded t . pro- Hannah, Williams Bdg., San Francisco, for $25,750.

Generated on 2024-09-30 01:23 GMT / https://hdl.handle.net/2027/uiug.30112007838433
Public Domain, Google-digitized / http://www.hathitrust.org/access_use#pd-google
Digitized by Google
Original from UNIVERSITY OF ILLINOIS AT URBANA-CHAMPAIGN

San Francisco, Cal.—Rousseau & Rousseau, Inc., 110 Sutter street, are preparing plans for six-story steel and brick apartment-building to be erected at Eddy and Hyde streets. Estimated cost is $100,000.

Contract for construction of steel and brick store-building for Commercial Center Realty Co., has been awarded to R. W. Moller, 180 Jessie street, for $67,000.

Edward G. Garden, Phelan Bdg., is preparing plans for factory-building on First street near Folsom. Estimated cost is $40,000.

Sidney B. Newsom, 14 Montgomery street, has completed plans and is receiving bids for construction of $10,000 partment-house.

Rousseau & Rousseau, Inc., 110 Sutter street, have completed plans for three-story tenement building.

J. F. Dunn, Monadnock Bdg., is preparing plans for frame apartment house to be erected at Pine and Leavenworth streets. Estimated cost is $22,500.

San Rafael, Cal.—All bids for construction of fire-house exceeded the $12,000 available and were rejected.

Santa Barbara, Cal.—Contract for construction of brick, steel, and frame building for First Presbyterian Church has been awarded to Kier Construction Co., American Bank Bdg., San Diego, for $80,000.

Santa Cruz, Cal.—Contract for construction of restaurant building on municipal pier has been awarded to W. C. Pait & Co. for $656.50.

Seattle, Wash.—Bids will be received until January 16 by Board of Public Works for construction of addition to Lake Union steam-power plant. Estimated cost is $350,000.

South San Francisco, Cal.—Moran Packing Co. will construct $500,000 plant.

Twin Falls, Ida.—All bids for construction of post-office have been rejected by the supervising architect.

Washington, Cal.—Election has been called for January 24 to vote on bond issue of $30,000 for construction of school building.

Washington, D. C.—Time for receiving bids for construction of post-office at Bakersfield, California, has been extended to January 15.

New bids for construction of post-office at Wenatchee, Washington, will be received by the supervising architect, Treasury Department, until January 19. Bids received last time were rejected because too high.

Bureau of Yards and Docks, Navy Department, will receive bids until February 5 for construction of extension to machine shop at Mare Island Navy Yard, California. Estimated cost is $150,000.

Willows, Cal.—Bliss & Flaville, Balboa Bdg. ,San Francisco, are preparing new plans for post-office building. The bids on the first plans exceeded the appropriation.

MACHINERY AND SUPPLIES

Berkeley, Cal.—Bids will be received until 10 a.m., January 12, by A. G. Briggs, city clerk, for furnishing two 1-ton motor trucks.

Denver, Colo.—Bids will be received until 2 p.m., January 10, at office of U. S. Reclamation Service, for furnishing butterfly and cylinder gates for Flathead project, Montana. Particulars from U. S. Reclamation Service, Denver or Washington, D. C.

Bids will be received at office of U. S. Reclamation Service until January 2 for furnishing caterpillar traction and sub-base for drag-line excavator for Truckee-Carson project, Nevada.

Following bids have been received for furnishing needle-valves for Roosevelt dam, Arizona: S. B. Harding, Chicago, $44,770; Joshua Hendy Iron Works, San Francisco, $48,500; Fulton Engine Works, Los Angeles, $48,875; Ellicott Machine Corporation, Baltimore, $55,900; Rosedale Foundry & Machine Co., Pittsburgh, $66,750; Pittsburgh Valve, Foundry & Construction Co., $67,500; Pelton Water Wheel Co., $74,415; Stacy-Schmidt Mfg. Co., York, Pa., $78,500.

Los Angeles, Cal.—Contract for furnishing mazda lamps to city has been awarded to H. C. Holabird, 218 East Third street, for $5000.

Napa, Cal.—Contract for furnishing road-roller to city has been awarded to Austin-Western Road Machinery Co. for $3150.

Oakdale, Cal.—City council has decided to spend $8000 on fire-fighting apparatus. Council will hold meeting on January 2 for consideration of purchase of equipment.

Portland, Ore.—Columbia Digger Co., 180 Burnside street, was low bidder at $1.85 per bbl. for furnishing cement to city. Nottingham & Co. and J. McCraken Co. both bid $1.90.

Sacramento, Cal.—Following bids have been received for furnishing motor-driven fire-apparatus: American-La France Co., new hose-wagons, $5750 and $5000, according to type; hose-wagons used at exposition, $4312.50; triple combination hose-wagon and pumping engine, $6000 and $6937.50; Seagrave Co., hose-wagons, $5450; combination, $6000; J. J. Shnerr, hose-wagons, $5250 and $5450; combination, $5550 and $5650; Hewett Ludlow Auto Co., hose-wagons, $5450; combination, $6000.

Contract for furnishing hose-wagons and pumping engines to city has been awarded to American-La France Fire Engine Co. for $14,400.

San Francisco, Cal.—Bids will be received until noon, January 23, at office of depot quartermaster, Fort Mason, for furnishing fire apparatus and hose.

Bids will be received until noon, January 26, by depot quartermaster, Fort Mason, for furnishing cement, metal lath, reinforcing and structural steel, and pipe and fittings for construction of barracks at Hawaii.

Board of Public Works will receive bids until January 31 for furnishing motor busses.

San Luis Obispo, Cal.—Santa Maria Gas & Power Co. will construct $25,000 gas-holder.

Santa Rosa, Cal.—Bids will be received until 5 p.m., January 2, by H. B. Snyder, city clerk, for furnishing a scarifier.

Washington, D. C.—Following bids have been received by Bureau of Yards and Docks for furnishing two fitting-out cranes for Mare Island navy yard: Victor R. Browning & Co., Cleveland, $44,000; McMyler Interstate Co., Bedford, Ohio, $48,993; Heyl & Patterson, Pittsburgh, $55,176; Edward F. Terry Manufacturing Co., New York, $41,990.

MISCELLANEOUS

Bakersfield, Cal.—Contract for hauling materials for 584-mile pipe-line in Oklahoma for Shell Oil Co. has been awarded to H. J. Brandt for about $500,000.

Following bids have been received for disposal of garbage and rubbish: J. W. Williams, $8850 per year, for garbage and rubbish; J. R. Rogers, $23,120 for garbage; H. C. Warren, to pay $864 for the privilege of hauling garbage; G. L. Ogilvie, to pay $25 for the privilege of hauling garbage; Reducton Co. of Los Angeles, $2280 for garbage and $4680 for garbage and rubbish; M. Redneck, $36,000 for garbage and rubbish; F. W. Nighbert, $8640 for garbage and rubbish; M. Shapiro and M. Alvarez, $20,000 for rubbish; D. D. Hall, $7560 for garbage.

Portland, Ore.—Bids will be received until 2 p.m., January 5, by lighthouse inspector for docking, cleaning, painting, and repairing light-vessel No. 88.

Salt Lake City, Utah.—Utah-Wyoming Consolidated Oil Co., D. F. Walker Bdg., will construct plants at Byron, Wyoming, for making gasoline and lamp-black from natural gas. Estimated cost is $500,000.

San Francisco, Cal.—Following bids were received by Board of Public Works for cutting granite at the Old Hall of Records site: J. H. Fitzpatrick, $4336.80; McDonald & Bodray, $4236.80; McGilvray-Raymond Granite Co., $3707.40.

ADVERTISEMENT FOR BIDS

SEALED PROPOSALS will be received by the Imperial Irrigation District, at its office, El Centro, California, until ten o'clock A.M., January 12, 1917, and thereupon opened, for the construction of the Rockwood Intake Gate, a reinforced concrete intake structure, complete.

The structure is to be approximately 745 feet in length, and 60 feet in width, and consists of a floor with cut off walls supporting a series of piers, which in turn carry a reinforced concrete box which traverses longitudinally the entire structure. The gate is to be erected on the California side of the Colorado River, about 6000 feet up-stream from the Hanlon Headgate of the Imperial Canal, and about 8 miles below Yuma, Arizona, being in Section 25, Township 16 South, Range 21 East, S. B. M., and to be completed on or before May 10, 1917.

Plans, specifications, form of contract, and proposal blanks may be seen at the office of the Board, El Centro, California, and at the office of the Chief Engineer, Calexico, California.

Each bid shall be accompanied by a certified check for TEN THOUSAND ($10,000.00), made payable to the Imperial Irrigation District, as a guarantee that the bidder will, within ten days after acceptance, enter into contract and furnish an acceptable bond in the sum of Seventy-five (75) per cent of the sum total of the contract price, based on the District's estimate of the amount of work to be done, for the faithful performance of the work and for the payment of all laborers and material men. The contract will be let to the lowest responsible bidder, but the right is reserved to reject any and all bids.

IMPERIAL IRRIGATION DISTRICT,
By F. H. McIver, Secretary.

EL CENTRO, CALIFORNIA,
DECEMBER 21, 1916.

Plans and specifications on file at the office of Western Engineering Publishing Company.

Generated on 2024-09-30 01:24 GMT / https://hdl.handle.net/2027/uiug.30112007838433
Public Domain, Google-digitized / http://www.hathitrust.org/access_use#pd-google
Digitized by Google
Original from UNIVERSITY OF ILLINOIS AT URBANA-CHAMPAIGN